CORPORATION OF THE CITY OF
CLARENCE-ROCKLAND
COMMITTEE OF THE WHOLE

January 21, 2019, 8:00 pm
Council Chambers
415 rue Lemay Street, Clarence Creek, Ont.

Pages

1. **Opening of the meeting**

2. **Adoption of the agenda**

3. **Disclosure of pecuniary interests** 5

4. **Delegations / Presentations**

5. **Petitions / Correspondence**

   5.1 **Petition presented by Michelle Lalonde requesting sewer services for Fairway Drive, Club house, David and Eagle streets and part of Caron Street** 7

6. **Notice of Motion**

7. **Comment/Question Period**

   Note: Members of the public may come forward to the podium and after seeking permission from the Presiding Officer, shall state their name and direct their question/comment on any matter which is related to any item included in this agenda to the Presiding Officer.
   The maximum time allowed in all circumstances for a question/comment shall be three (3) minutes per person per meeting. There shall be a maximum of 30 minutes dedicated to the question/comment period. Any unasked questions/comments due to the time restriction may be submitted in writing to the Clerk.
   At no time shall this question period be taken by members of the audience to make speeches or accusations.

8. **Report from the United Counties of Prescott and Russell**

9. Committee/Staff Reports

9.1 Alterations to balcony located at the Paroisse Très-Sainte-Trinité Presbytery 11

9.2 Budget status report – November 30, 2018 29

9.3 Tax Administration Policy 35

9.4 Monthly statistics - Construction - December 2018 57

9.5 Protective Services Monthly Statistics (November 2018) 59

9.6 Protective Services Monthly Statistics (December 2018) 65

10. Other items

11. Adjournment

CORPORATION DE LA CITÉ DE
CLARENCE-ROCKLAND
COMITÉ PLÉNIER

le 21 janvier 2019, 20 h 00
Salle du Conseil
415 rue Lemay Street, Clarence Creek, Ont.

Pages

1. **Ouverture de la réunion**

2. **Adoption de l'ordre du jour**

3. **Déclarations d'intérêts pécuniaires** 5

4. **Délégations / Présentations**

5. **Pétitions / Correspondance**

   5.1 **Pétition présentée par Michelle Lalonde demandant un service d'égouts pour les rues Fairway, Eagle, Club house et David et une partie de la rue Caron** 7

6. **Avis de motion**

7. **Période de Questions/Commentaires**

   Note: Les membres du public sont invités à se rendre au podium et après avoir reçu la permission du président de l'assemblée, doivent se nommer et adresser leur question et/ou commentaire sur tout sujet qui est relié à n'importe quel item qui figure à l'ordre du jour au président de réunion.
   Le temps maximal accordé pour une question/commentaire dans toutes circonstances est de trois (3) minutes par personne par réunion. Il y aura un maximum de 30 minutes consacrés à la période de questions/ commentaires. Toutes questions et/ou commentaires qui n'ont pas été adressés par faute de temps peuvent être soumis par écrit à la greffière.
   En aucun cas, cette période de questions/ commentaires ne peut être utilisée par les membres du public pour faire des discours ou porter des accusations.

8. **Rapport des Comtés unis de Prescott et Russell**

9. **Rapports des Comités/Services**

   9.1 **Modifications au balcon du presbytère de la Paroisse Très-Sainte-Trinité** 11

9.2 Rapport financier sur le budget opérationnel – 30 novembre 2018 29

9.3 Politique d'administration et collecte des taxes foncières 35

9.4 Statistiques mensuelles - construction - décembre 2018 57

9.5 Statistiques mensuelles du service de la Protection (Novembre 2018) 59

9.6 Statistiques mensuelles du service de la Protection (Décembre 2018) 65

10. Autres items

11. Ajournement

Declaration of pecuniary interest
Déclaration d'intérêt pécuniaire

Date of meeting Date de la réunion:	
Item Number Numéro de l'item:	
Subject of the item: Sujet de l'item :	
Name of Council Member Nom du membre du conseil	

I, _____, hereby declare a pecuniary interest in the matter identified above for the following reason :

Je, _____, déclare un intérêt pécuniaire en ce qui concerne l'article ci-haut mentionné, pour la raison suivante :

Name (print)	Signature	Date

This declaration is filed in accordance with the *Municipal Conflict of Interest Act* and will be recorded in the meeting minutes and will be made available in a public registry. / Cette déclaration est soumise sous la *Loi sur les conflits d'intérêt municipaux* et sera enregistrée dans le procès-verbal de la réunion et sera disponible dans un registre public.

Excerpt from the Municipal Conflict of Interest Act, R.S.O. 1990, c. M.50

DUTY OF MEMBER

When present at meeting at which matter considered

5 (1) Where a member, either on his or her own behalf or while acting for, by, with or through another, has any pecuniary interest, direct or indirect, in any matter and is present at a meeting of the council or local board at which the matter is the subject of consideration, the member,

(a) shall, prior to any consideration of the matter at the meeting, disclose the interest and the general nature thereof;

(b) shall not take part in the discussion of, or vote on any question in respect of the matter; and

(c) shall not attempt in any way whether before, during or after the meeting to influence the voting on any such question. R.S.O. 1990, c. M.50, s. 5 (1).

Where member to leave closed meeting

(2) Where the meeting referred to in subsection (1) is not open to the public, in addition to complying with the requirements of that subsection, the member shall forthwith leave the meeting or the part of the meeting during which the matter is under consideration. R.S.O. 1990, c. M.50, s. 5 (2).

Extrait de la Loi sur les conflits d'intérêts municipaux, L.R.O. 1990, chap. M.50

OBLIGATIONS DU MEMBRE

Participation à une réunion où l’affaire est discutée

5 (1) Le membre qui, soit pour son propre compte soit pour le compte d’autrui ou par personne interposée, seul ou avec d’autres, a un intérêt pécuniaire direct ou indirect dans une affaire et participe à une réunion du conseil ou du conseil local où l’affaire est discutée, est tenu aux obligations suivantes :

a) avant toute discussion de l’affaire, déclarer son intérêt et en préciser la nature en termes généraux;

b) ne pas prendre part à la discussion ni voter sur une question relative à l’affaire;

c) ne pas tenter, avant, pendant ni après la réunion, d’influencer de quelque façon le vote sur une question relative à l’affaire. L.R.O. 1990, chap. M.50, par. 5 (1).

Exclusion de la réunion à huis clos

(2) Si la réunion visée au paragraphe (1) se tient à huis clos, outre les obligations que lui impose ce paragraphe, le membre est tenu de quitter immédiatement la réunion ou la partie de la réunion où l’affaire est discutée. L.R.O. 1990, chap. M.50, par. 5 (2).

ANNEXE 1

PÉTITION

Au : Conseil de la Cité de Clarence-Rockland

Cette pétition a pour but d'informer le Conseil de la Cité Clarence-Rockland, que les résidents des rues Fairway Drive, Club house, David, Eagle ainsi qu'une partie de la rue Caron, aimeraient avoir le service des égouts. Nous sommes conscients que cette demande engendrerait certaines dépenses pour la ville, mais nous croyons que ce service apporterait des avantages environnementaux et écologiques à longs termes. Finalement, les résidents conscientisent qu'ils devront défrayer une certaine sommes afin d'avoir l'obtention de ce service.

The purpose of this petition is to inform the Clarence-Rockland council that the residents of Fairway Drive, Eagle, Clubhouse, David and part of Caron would like to request sewer services. We are aware that this service will incur certain expenses for the city, however, we believe that there are also numerous advantages to the environment and the residents. Finally, the residents are conscious that they will have to pay a certain amount for this service.

Cité de Clarence-Rockland
1560 rue Lauriert
Rockland, Ontario
K4K 1P7
www.clarence-rockland.com

PÉTITION

PAGE _____ of _____

Au: Conseil de la Cité de Clarence-Rockland

Attendu que: (fournir une brève description de l'enjeu/problème/demande en question)

Je/Nous soussignés, la pétition au Conseil de la Cité de Clarence-Rockland comme suit:

Nom (lettres moulées)	Adresse	Signature
Luc RAYMOND	689 FAIRWAY DR	
YOLANDE CYR	693 FAIRWAY DR	
Lucille Leporeitre	691 Fairway Dr	
Richard Lefebvre	700 Fairway	
Elizabeth Elliott	697 Fairway Drive	
Sylvain Ramouney	1449 Caron	
Chantal Saucier	1445 CARON ST	
Tony-Louise Santos	1453 Caron St	
Mike Carter	1453 CARON ST	
MIKE VILLENEUVE	1457 CARON ST	
Stephan Beauchamp	1465 Caron	
Nancy Laroche	1379 David Rd	
Terry Kehler	1403 David	
Louise Tremblay	1411 DAVID	
Sylvain Lanthier	1419 David	

Toute l'information soumise est recueillie conformément aux articles 8 et 239(1) de la *Loi de 2001 sur les Municipalités* et peux être utilisée durant les discussions du conseil et divulguée en entier, incluant les adresses courriel, noms et adresses aux personnes demandant accès aux documents. Toute l'information soumise à la municipalité est sujette à la *Loi sur l'accès à l'information municipale et à la protection de la vie privée* (LAIMPVP). Toute question à propos de cet avis de cueillette doit être adresseée au bureau du greffier au 1560 rue Laurier, Rockland (Ontario), K4K 1P7.

Clarence-Rockland

City of Clarence-Rockland
1560 Laurier Street
Rockland, Ontario
K4K 1P7
www.clarence-rockland.com

PETITION

PAGE _____ **of** _____

To: The Council of the City of Clarence-Rockland

Whereas: (provide a brief description of issue/problem/request in question)

I/We the undersigned, petition the Council of the City of Clarence-Rockland as follows:

Name (print)	Address	Signature
Kim CLAPPISON	1427 DAVID RD	
SYLVIE BLANCHETTE	597 CLUBHOUSE	
ANDRE CAYER	601 CLUBHOUSE	
Guy CYR	692 Fairway DR.	
Geneviève Duff	683 Fairway Dr	
René Tassé	694 FAIRWAY	

All information submitted is collected in accordance with the Municipal Act, 2001, s.8 and 239(1) and may be used in Council deliberations, and disclosed in full, including email, names and addresses to persons requesting access to records. All information submitted to the municipality is subject to the Municipal Freedom of Information Act (MFIPPA). Questions about this notice of collection should be directed to the Clerk's Office 1560 Laurier Street, Rockland (Ontario) K4K 1P7.

Cité de Clarence-Rockland
1560 rue Lauriert
Rockland, Ontario
K4K 1P7
www.clarence-rockland.com

PÉTITION

PAGE _____ of _____

Au: Conseil de la Cité de Clarence-Rockland

Attendu que: (fournir une brève description de l'enjeu/problème/demande en question)

Je/Nous soussignés, la pétition au Conseil de la Cité de Clarence-Rockland comme suit:

Nom (lettres moulées)	Adresse	Signature
Michelle Lalonde	680 Fairway DR Rockland ON	M Lalonde
GHISLAIN LALONDE	676 FAIRWAY DR	G Lalonde
BARRIE BRAITHWAITE	673 FAIRWAY DR	B Braithwaite
MICHAEL R. FOX	613 CLUBHOUSE DR.	M R Fox
GAETAN SIMONEAU	" "	[illegible]
Frank + Jasmine McLennan	629 Eagle St.	[illegible]
Michelle Borysenko	633 Eagle	Michele Borysenko
Isabelle ALCENJAC	637 Eagle	Isabelle Alcenjac
Christule Trembley	625 Club House	C Trembley
Leila Karim	645 Eagle St.	[illegible]
Paul Gendron	649 Eagle	[illegible]
MARC GRATTON	657 EAGLE	[illegible]
Julie Lariviere	653 Eagle	Julie Lariviere
Amelie Camire	693 Fairway	Amelie Camire

Toute l'information soumise est recueillie conformément aux articles 8 et 239(1) de la *Loi de 2001 sur les Municipalités* et peux être utilisée durant les discussions du conseil et divulguée en entier, incluant les adresses courriel, noms et adresses aux personnes demandant accès aux documents. Toute l'information soumise à la municipalité est sujette à la *Loi sur l'accès à l'information municipale et à la protection de la vie privée* (LAIMPVP). Toute question à propos de cet avis de cueillette doit être adresseée au bureau du greffier au 1560 rue Laurier, Rockland (Ontario), K4K 1P7.

RAPPORT N° AMÉ-19-14-R

Date	21/01/2019
Soumis par	Marie-Eve Bélanger
Objet	Modifications au balcon du presbytère de la Paroisse Ste-Trinité
# du dossier	2178-2180 Laurier

1) **NATURE / OBJECTIF :**
La nature de ce rapport est d'approuver les rénovations nécessaires au balcon du presbytère situé au 2178-2180 rue Laurier à Rockland.

2) **DIRECTIVE/POLITIQUE ANTÉCÉDENTE :**
N/A

3) **RECOMMANDATION DU SERVICE:**
ATTENDU QUE le balcon situé au presbytère de la Paroisse Ste-Trinité (2178-2180 rue Laurier) est en très mauvais état et doit être reconstruit; et

ATTENDU QUE le presbytère est désigné comme ayant une valeur sur le Plan du patrimoine culturel; et

ATTENDU QUE la reconstruction du balcon du presbytère, tel qu'il est bâti présentement, s'avère trop couteuse.

QUE le comité plénier recommande au conseil d'approuver les modifications au balcon du presbytère, tel que présenté par les plans de Michanie Construction datés du 31 aout 2018.

WHEREAS the balcony located at the Paroisse Ste-Trinité Presbytery (2178-2180 Laurier Street) is in very bad shape and must be reconstructed; and

WHEREAS the Presbytery is designated as being of cultural heritage value; and

WHEREAS the reconstruction of the Presbytery's balcony, as it is constructed today, would be too costly;

THAT the Committee of the Whole recommends that Council approve the alterations to the presbytery balcony, as described on the plans prepared by Michanie Construction dated August 31, 2018.

4) **HISTORIQUE :**

Le règlement 2008-58 a été approuvé en 2008 afin de cité l'église et le presbytère de la Paroisse Ste-Trinité de Rockland comme ayant une valeur patrimoniale. Le balcon, son belvédère et ses garde-corps en béton décoratifs font partit des principaux attributs du presbytère.

5) **DISCUSSION :**

L'article 33 de la Loi sur le patrimoine de l'Ontario stipule que nul propriétaire d'un bien désigné au termes de l'article 29 ne doit transformer un bien si celle-ci aura une incidence sur les attributs patrimoniaux du bien, énoncés dans la description des attributs patrimoniaux, sauf s'il en fait la demande au conseil et reçoit un consentement écrit pour procéder à la transformation.

En janvier 2017, le comité paroissial a commencé les démarches afin de refaire les balcons du presbytère, soit en béton. La facture s'élevait à plus de 400 000,00 $ pour refaire les balcons ce qui était beaucoup trop élevé pour la Paroisse.

En mai 2018, Michanie Construction a été engagé par la Paroisse afin d'évaluer et conceptualisé le projet de réparation des balcons. Lors de l'investigation, Michanie a découvert que la structure est érodée et n'est plus bien ancré avec l'édifice ce qui rend l'accès non-sécuritaire pour les locataires. La façade de l'édifice supporte difficilement le poids de la structure existante. Il est important d'agir rapidement pour des raisons de santé et sécurité.

Puisque c'est un bâtiment patrimonial, il est important de garder l'aspect visuel identiques ou similaires.

Michanie Construction propose l'utilisation de bois pour refaire les plancher, recouvert d'une membrane qui aura l'aspect du ciment. Ceci sera beaucoup plus léger pour le support de la structure. Il propose également de remplacer les rampes et les balustrades de béton par du bois peinturer blanc. Il recommande également d'installer des colonnes en bois structural qui seront soit peinturer ou recouvertes en aluminium.

En remplaçant les balcons et les balustrades avec du bois, il sera moins couteux et plus viable. C'est également une question de santé et sécurité.

Il est important de mentionner que la hauteur des balustrades du balcon est présentement de 29 pouces. Le Code du bâtiment requiert 42 pouces. Puisque le bâtiment est existant, le Code du bâtiment permet une reconstruction avec la même hauteur existante des balustrades. Le comité paroissial, de son côté aimerait aller de l'avant avec des balustrades de 42 pouces pour fins de sécurité de ses locataires. Puisque le presbytère est à une certaine distance de la rue, la différence de hauteur des balustrades sera minime.

6) **CONSULTATION :**

Suite à quelques rencontres avec des gens du comité paroissial ainsi qu'avec Michanie Construction, il fut établi que les balustrades en bois ainsi que les colonnes auront le même aspect que ceux qui sont existants. Le but est de garder le cachet du bâtiment et celui-ci sera conservé.

Le comité consultatif a été consulté et a vérifié les plans soumis des rénovations. Des membres du comité ont également rencontré un représentant du presbytère ainsi que Michanie Construction qui ont fait le design du nouveau balcon.

7) **RECOMMANDATION OU COMMENTAIRES DU COMITÉ :**
Le comité consultatif du patrimoine est d'accord avec les plans et recommandations de Michanie Construction.

8) **IMPACT FINANCIER (monétaire/matériaux/etc.):**
N/A

9) **IMPLICATIONS LÉGALES :**
N/A

10) **GESTION DU RISQUE (RISK MANAGEMENT) :**
L'approbation de balustrade plus haute réduira le risque d'accident.

11) **IMPLICATIONS STRATÉGIQUES :**
N/A

12) **DOCUMENTS D'APPUI:**
Règlement 2008-58
Plans de rénovations

2

RÈGLEMENT NO. 2008-58

Citant deux biens patrimoniaux
2178, rue Laurier
2184, rue Laurier

Corporation de la Cité de Clarence-Rockland

rédigé par

Cité de Clarence-Rockland
1560, rue Laurier
Rockland (Ontario)
K4K 1P7
(613) 446-6022

BY-LAW NO. 2008-58

Designate two heritage properties
2178 Laurier Street
2184 Laurier Street

Corporation of the City of Clarence-Rockland

prepared by

City of Clarence-Rockland
1560 Laurier Street
Rockland, Ontario
K4K 1P7
(613) 446-6022

CORPORATION
DE LA CITÉ DE / OF THE CITY OF
CLARENCE-ROCKLAND
VRAIE COPIE CONFORME DE
CERTIFIED TO BE TRUE COPY OF:
By-law 2008-58
Signature
GREFFIÈRE ADJOINTE / DEPUTY CLERK

LA CORPORATION DE LA CITÉ DE CLARENCE-ROCKLAND

RÈGLEMENT NO. 2008-58

UN RÈGLEMENT POUR CITER LES PROPRIÉTÉS LOCALISÉES AU 2178 ET 2184, RUE LAURIER COMME PRÉSENTANT UNE VALEUR OU UN CARACTÈRE SUR LE PLAN DU PATRIMOINE CULTUREL;

ATTENDU QUE l'article 29 de la *Loi sur le patrimoine de l'Ontario* prévoit que le Conseil de la municipalité peut, au moyen d'un règlement, désigner un bien situé dans la municipalité comme ayant une valeur ou un caractère sur le plan du patrimoine culturel;

ATTENDU QUE le Conseil de la Corporation de la Cité de Clarence-Rockland a signifié au propriétaire des biens et à la Fiducie du patrimoine ontarien l'avis d'intention de désigner le bien susmentionné et a publié ce même avis dans un journal généralement lu dans la municipalité;

ET ATTENDU QU'aucun avis d'opposition concernant les désignations proposées n'a été signifié au greffier de la municipalité;

IL EST RÉSOLU QUE le Conseil de la Corporation de la Cité de Clarence-Rockland donne force de loi à ce qui suit:

Article 1 : Les Règlements numéro 2006-115 et 2006-116 sont par la présente abrogés.

Article 2 : Les propriétés situées du côté nord de la rue Laurier, décrites comme étant LT1 E/S Marston St, 2 E/S Marston St PL A. Bell 1908 Rockland; LT 16 N/S Main St. in TWP LT 27 PL A. Bell 1908 Rockland; LT 17 N/S Main St. in TWP LT 27 PL A. Bell 1908 Rockland; LT 18 N/S Main St. in TWP LT 28 PL A. Bell 1908 anciennement dans la ville de Rockland, maintenant dans la Cité de Clarence-Rockland et identifiées en noir sur le plan ici-bas et faisant partie du présent règlement, seront les propriétés concernées par le présent règlement.

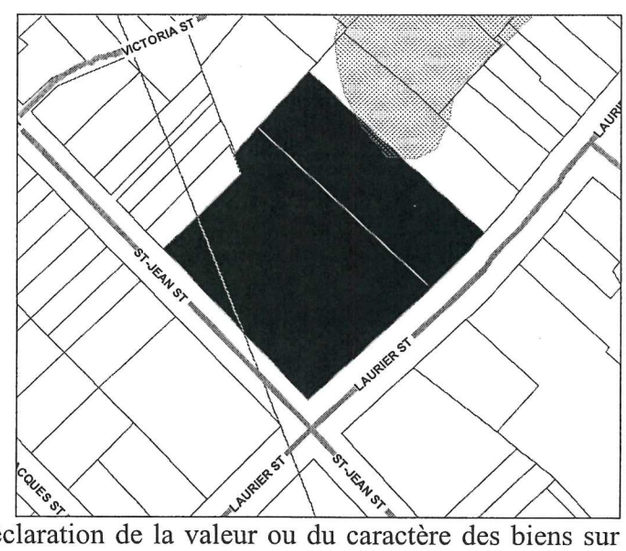

Article 3 : La déclaration de la valeur ou du caractère des biens sur le plan du patrimoine culturel et la description des attributs patrimoniaux sont identifiées comme suit :

3.1 **Description du bien** – Presbytère de la paroisse Très-Sainte-Trinité, 2178, rue Laurier
Le presbytère de la paroisse Très-Sainte-Trinité est situé du côté nord de la rue Laurier.

Déclaration de la valeur ou du caractère sur le plan du patrimoine culturel
Simultanément, la construction du presbytère et de l'église a été amorcée en 1917 sous la supervision du curé Hudon. Ce bâtiment occupe un site choisi au centre-ville de Rockland.

Le presbytère coiffé d'une toiture à l'allure mansardée est un bel exemple de l'architecture des années 1920. Tout comme l'église, les murs

extérieurs sont en pierres grises tirées de la carrière de Rockland. À l'intérieur, les murs porteurs et les planchers sont en béton armé (15 cm d'épaisseur). Les parquets sont en céramique et datent du temps de la construction. Avec son belvédère, ses grands balcons aux deux étages et sa tour ornée d'un mât, le presbytère prend beaucoup plus l'allure d'un château français qu'un simple manoir de petit seigneur.

La décoration intérieure a été confiée à des artisans de grande réputation, tels que T.-X. Renaud et Georges Delfosse, peintres – décorateurs; Carli – Petrucci, statutaires; Joseph Villeneuve, boiseries et meubles, et Hamon et Hess, tuiles et marbres. Cet édifice et son contenu, sont considérés comme des joyaux du patrimoine religieux de la municipalité.

Déclaration des attributs patrimoniaux

Les principaux attributs du presbytère qui témoignent de sa valeur en tant que lien important avec l'histoire de la Cité de Clarence-Rockland comprennent :

- Les murs extérieurs de pierres grises provenant de la carrière de Rockland;
- Son toit mansarde, la tourelle, ses larges balcons, son belvédère et leurs garde-corps en béton décoratif;
- Son emplacement et ses dimensions.

Les principaux attributs du presbytère qui témoignent de sa valeur en tant que préservation de décoration intérieure comprennent :

- Sculptures sur bois;
- Les boiseries impressionnantes;
- Le verre gravé;
- Tables et buffet;
- Vaisselier;
- Horloge.

3.2 **Description du bien** – Église Très-Sainte-Trinité, 2184, rue Laurier

L'Église Très-Sainte-Trinité est située du côté nord de la rue Laurier et du côté est de la rue Saint-Jean.

Déclaration de la valeur ou du caractère sur le plan du patrimoine culturel

L'église est de style roman. Elle occupe un site choisi au centre-ville de Rockland. Les murs extérieurs de ce bâtiment sont de pierres grises provenant de la carrière de Rockland. Son clocher abrite 5 cloches (do, fa, sol, la, do) qui proviennent des fonderies Paccard à Annecy-Le-Vieux dans la Haute Savoie, en France.

Le regretté curé Hudon et la communauté reconstruisirent l'église en 1917. Doté d'un orgue Casavant et d'une acoustique hors pair, l'église Très-Sainte-Trinité se prête bien à des concerts de musique et de chant.

La décoration intérieure a été confiée à des artisans de grande réputation, tels que T.-X. Renaud et Georges Delfosse, peintres – décorateurs; Carli – Petrucci, statutaires; Joseph Villeneuve, boiseries et meubles, et Hamon et Hess, tuiles et marbres. Cet édifice et son contenu, sont considérés comme des joyaux du patrimoine religieux de la municipalité.

Déclaration des attributs patrimoniaux

Les principaux attributs de l'église qui témoignent de sa valeur en tant que lien important avec l'histoire de la Cité de Clarence-Rockland comprennent :

- Les murs extérieurs de pierres grises provenant de la carrière de Rockland;
- Son clocher;
- Son emplacement et ses dimensions.

Les principaux attributs de l'église qui témoignent de sa valeur en tant que préservation de décoration intérieure comprennent :

- Sculptures sur bois;
- Meubles;
- Autels centraux dans le chœur;
- Autels latéraux;
- Confessionnaux;
- Orgues;
- Chaire et abat-voix;
- Table de communion;
- Tables et consoles;
- Crucifix et ornements;
- Statues;
- Chemin de croix;
- Fonts baptismaux;
- Stalles;
- Vitraux.

Article 4 : Le conseiller légal de la Cité est par la présente autorisé à enregistrer une copie de ce règlement sur le registre des titres du Bureau d'enregistrement local.

Article 5 : Le greffier est par la présente autorisé à s'assurer qu'une copie du règlement, accompagnée d'une déclaration qui explique la valeur ou le caractère du bien sur le plan du patrimoine culturel et d'une description de ses attributs patrimoniaux soient signifiées au propriétaire du bien et à la Fiducie du patrimoine ontarien, ainsi que de publier un avis d'adoption du règlement dans le même journal généralement lu dans la municipalité.

Article 6 : Ce règlement entrera en vigueur à sa date d'adoption.

FAIT ET ADOPTÉ EN RÉUNION PUBLIQUE, CE 14IÈME JOUR D'AVRIL, 2008.

(SIGNÉ) Richard Lalonde
MAIRE

(SIGNÉ) Daniel Gatien
GREFFIER

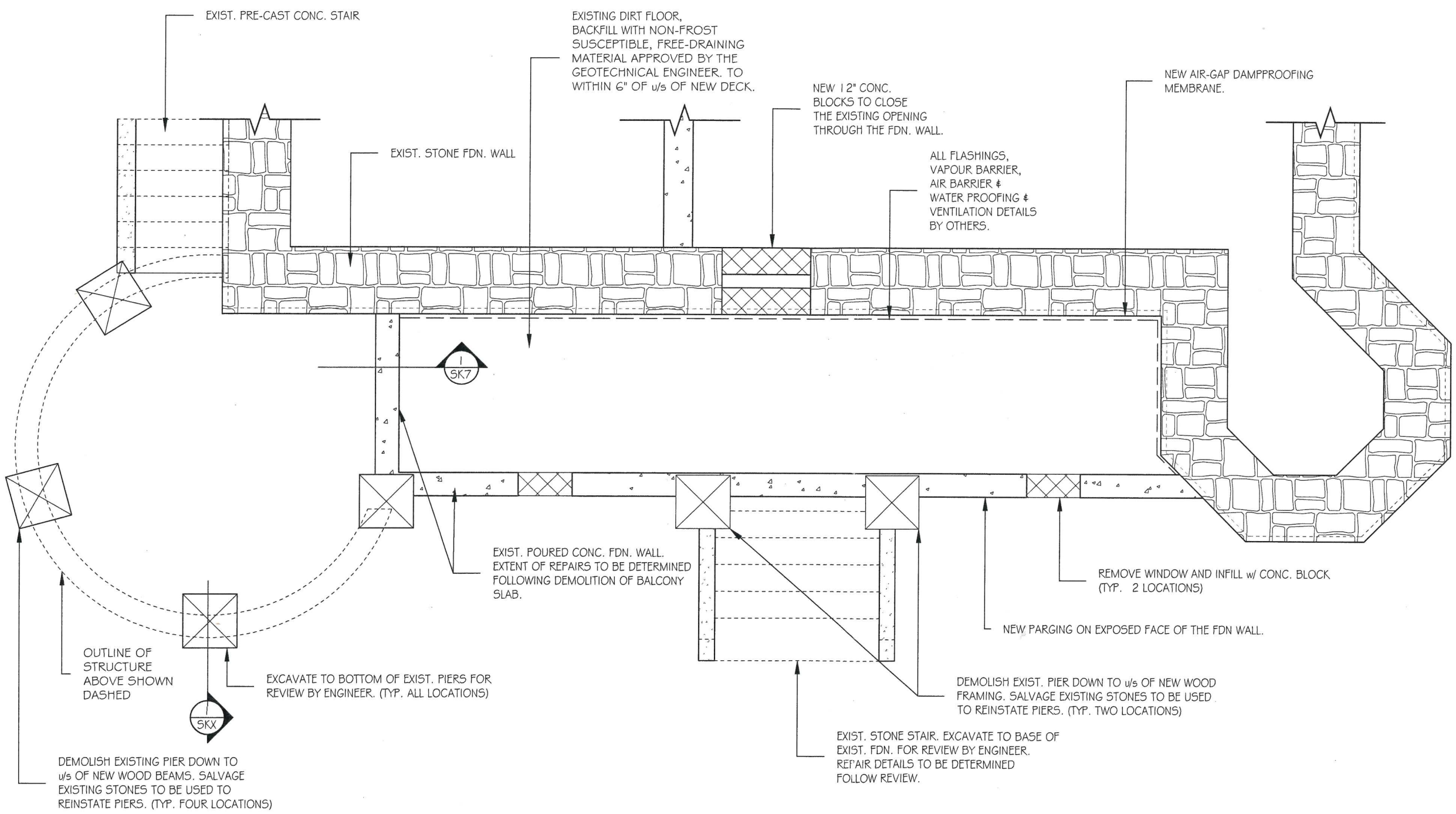

1 / SK1 FDN. PLAN SCALE 1/4"=1'-0"

GASCON ENGINEERING & STRUCTURAL DESIGN INC.

TEL: 343.999.4373
NOEL.GASCON@ROGERS.COM
WWW.GASCONESD.COM

CLIENT
Michanie Construction

LICENSED PROFESSIONAL ENGINEER
N.C.A. GASCON
90546920
1/10/2018
PROVINCE OF ONTARIO

NO	REVISION	DATE
1	ISSUED FOR REVIEW	8/31/2018
2	ISSUED FOR PERMIT	1/10/2018

PROJECT / LOCATION
BALCONY SLAB REPLACEMENT

2178 Laurier Ave
ROCKLAND, ONTARIO

DRAWING
FOUNDATION PLAN

DESIGNED BY	APPROVED BY
Noel Gascon	NG
DRAWN BY: EA	SCALE: AS NOTED
DATE: 31-AUG-2018	
PROJECT NO.: 2018-070	SHEET NO.: SK1

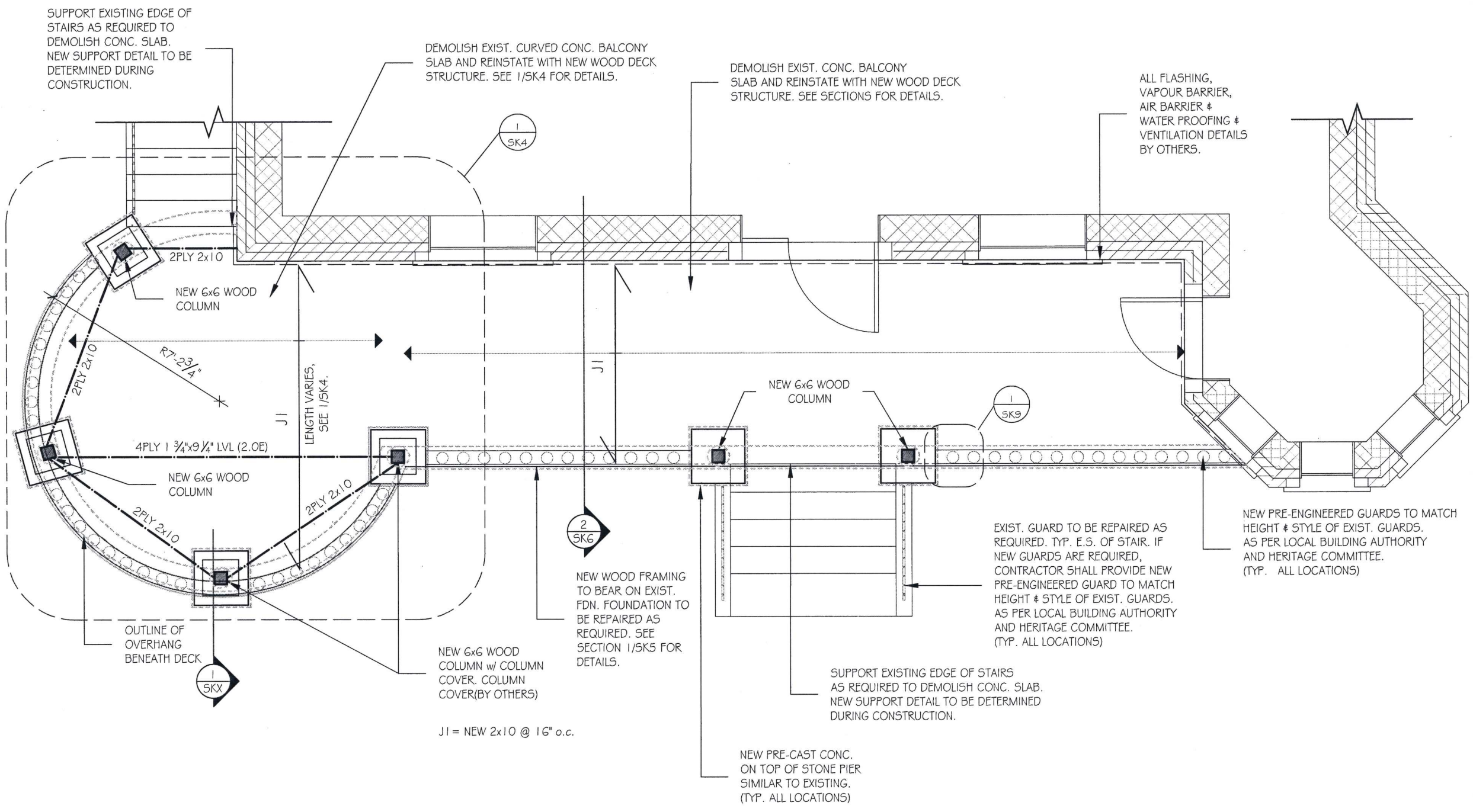

1 / SK2 GROUND FLOOR PLAN SCALE 1/4"=1'-0"

GASCON ENGINEERING & STRUCTURAL DESIGN INC.

TEL: 343.999.4373
NOEL.GASCON@ROGERS.COM
WWW.GASCONESD.COM

CLIENT
Michanie Construction

LICENSED PROFESSIONAL ENGINEER
N.C.A. GASCON
90546920
1/10/2018
PROVINCE OF ONTARIO

NO	REVISION	DATE
1	ISSUED FOR REVIEW	8/31/2018
2	ISSUED FOR PERMIT	1/10/2018

PROJECT / LOCATION
BALCONY SLAB REPLACEMENT

2178 Laurier Ave
ROCKLAND, ONTARIO

DRAWING
GROUND FLOOR PLAN

DESIGNED BY	APPROVED BY
Noel Gascon	NG
DRAWN BY: EA	SCALE: AS NOTED
DATE: 31-AUG-2018	
PROJECT NO. 2018-070	SHEET NO. SK2

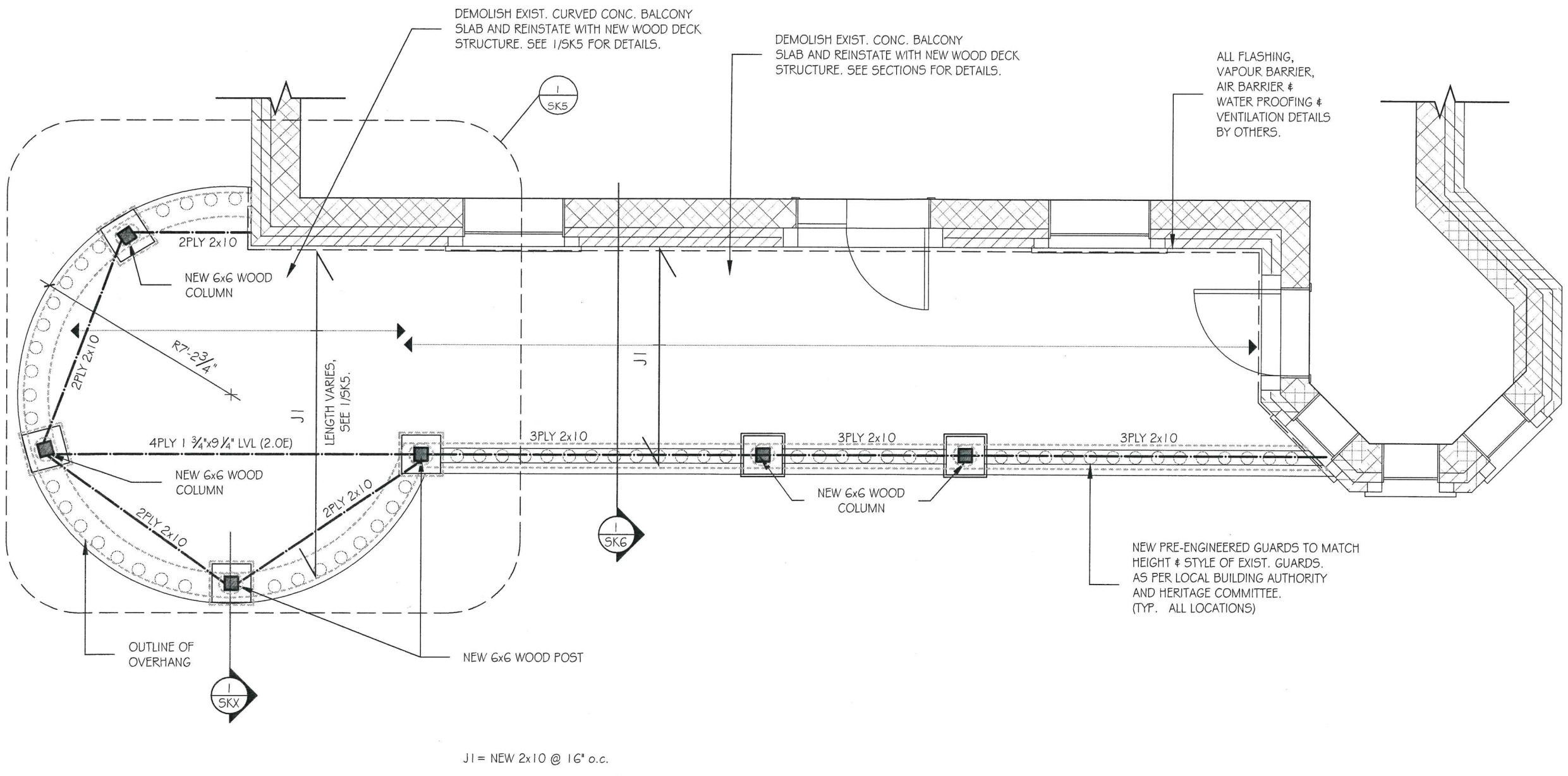

J1 = NEW 2x10 @ 16" o.c.

1 / SK3 SECOND FLOOR PLAN SCALE 1/4"=1'-0"

GASCON ENGINEERING & STRUCTURAL DESIGN INC.

TEL: 343.999.4373
NOEL.GASCON@ROGERS.COM
WWW.GASCONESD.COM

CLIENT
Michanie Construction

LICENSED PROFESSIONAL ENGINEER
N.C.A. GASCON
90546920
1/10/2018
PROVINCE OF ONTARIO

NO	REVISION	DATE
1	ISSUED FOR REVIEW	8/31/2018
2	ISSUED FOR PERMIT	1/10/2018

PROJECT / LOCATION
BALCONY SLAB REPLACEMENT

2178 Laurier Ave
ROCKLAND, ONTARIO

DRAWING
SECOND FLOOR PLAN

DESIGNED BY	APPROVED BY
Noel Gascon	NG
DRAWN BY: EA	SCALE: AS NOTED
DATE: 31-AUG-2018	
PROJECT NO. 2018-070	SHEET NO. SK3

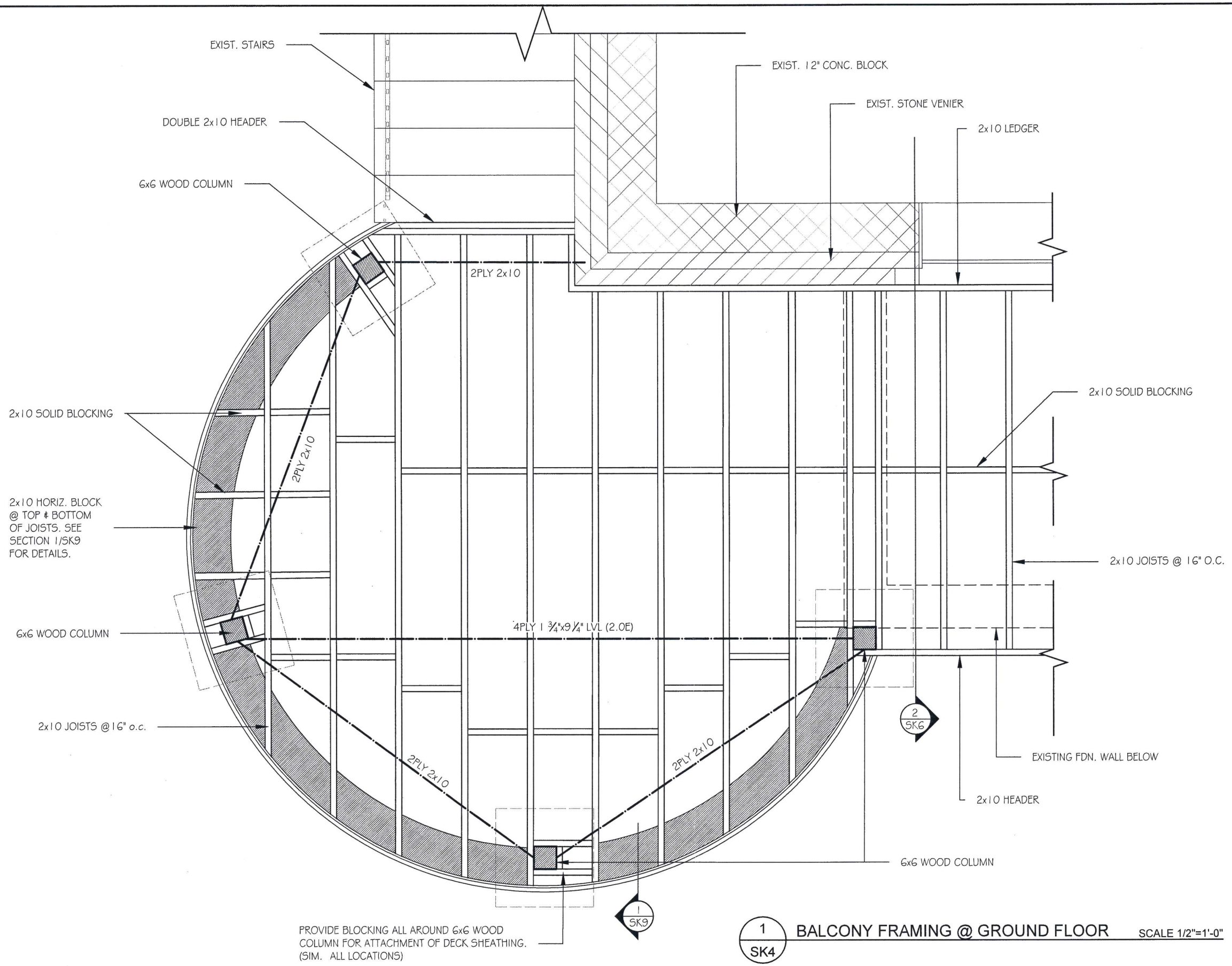

1 / SK4 BALCONY FRAMING @ GROUND FLOOR SCALE 1/2"=1'-0"

GASCON ENGINEERING & STRUCTURAL DESIGN INC.

TEL: 343.999.4373
NOEL.GASCON@ROGERS.COM
WWW.GASCONESD.COM

CLIENT
Michanie Construction

LICENSED PROFESSIONAL ENGINEER
N.C.A. GASCON
90546920
1/10/2018
PROVINCE OF ONTARIO

NO	REVISION	DATE
1	ISSUED FOR REVIEW	8/31/2018
2	ISSUED FOR PERMIT	1/10/2018

PROJECT / LOCATION
BALCONY SLAB REPLACEMENT

2178 Laurier Ave
ROCKLAND, ONTARIO

DRAWING
BALCONY FRAMING@ GROUND FLOOR

DESIGNED BY	APPROVED BY
Noel Gascon	NG
DRAWN BY: EA	SCALE: 1/2"=1'-0"
DATE: 31-AUG-2018	
PROJECT NO.: 2018-070	SHEET NO.: SK4

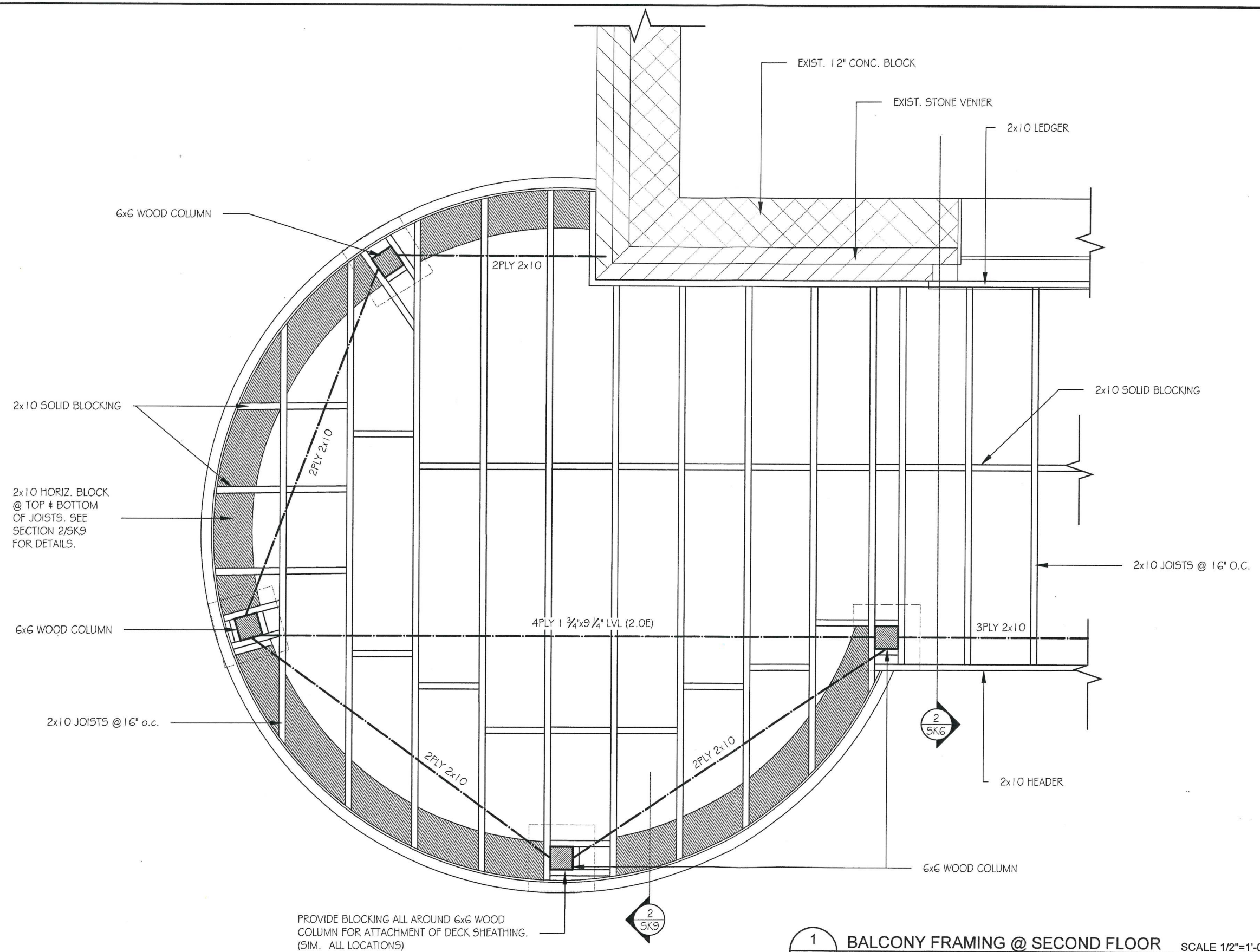

1 SK5 BALCONY FRAMING @ SECOND FLOOR SCALE 1/2"=1'-0"

GASCON ENGINEERING & STRUCTURAL DESIGN INC.

TEL: 343.999.4373
NOEL.GASCON@ROGERS.COM
WWW.GASCONESD.COM

CLIENT
Michanie Construction

LICENSED PROFESSIONAL ENGINEER
N.C.A. GASCON
90546920
1/10/2018
PROVINCE OF ONTARIO

NO	REVISION	DATE
1	ISSUED FOR REVIEW	8/31/2018
2	ISSUED FOR PERMIT	1/10/2018

PROJECT / LOCATION
BALCONY SLAB REPLACEMENT

2178 Laurier Ave
ROCKLAND, ONTARIO

DRAWING
BALCONY FRAMING@ 2ND FLOOR

DESIGNED BY	APPROVED BY
Noel Gascon	NG
DRAWN BY: EA	SCALE: 1/2"=1'-0"
DATE: 31-AUG-2018	
PROJECT NO.: 2018-070	SHEET NO.: SK5

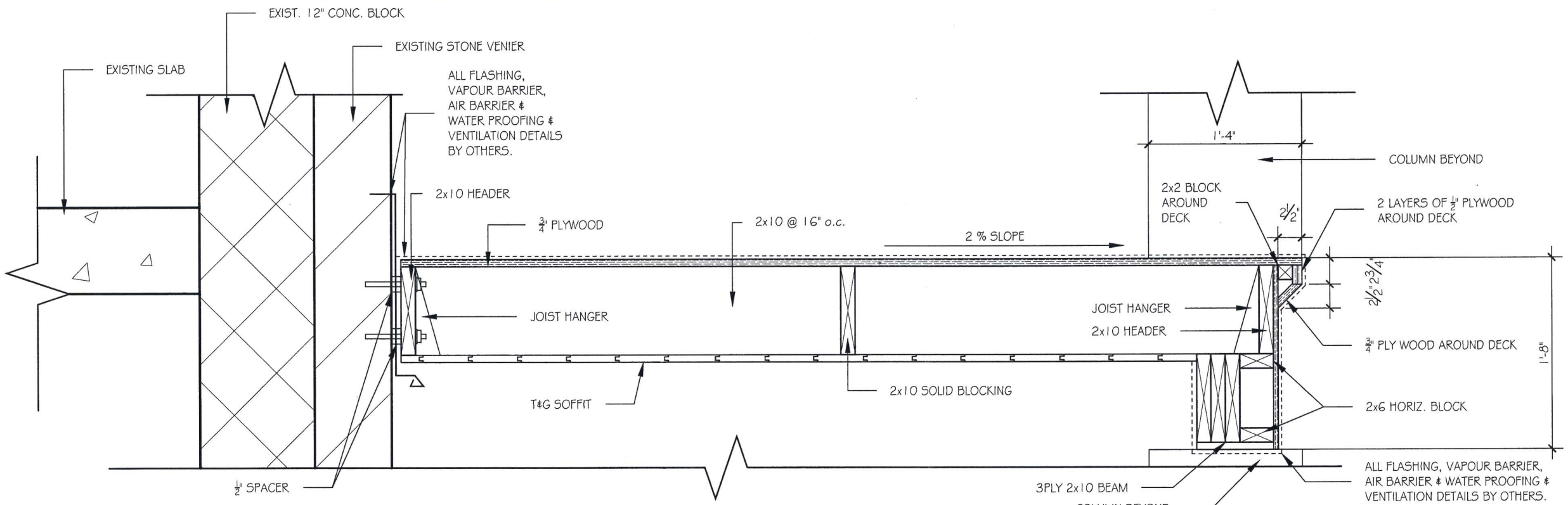

1 / SK6 SECTION@SECOND FLOOR SCALE 1"=1'-0"

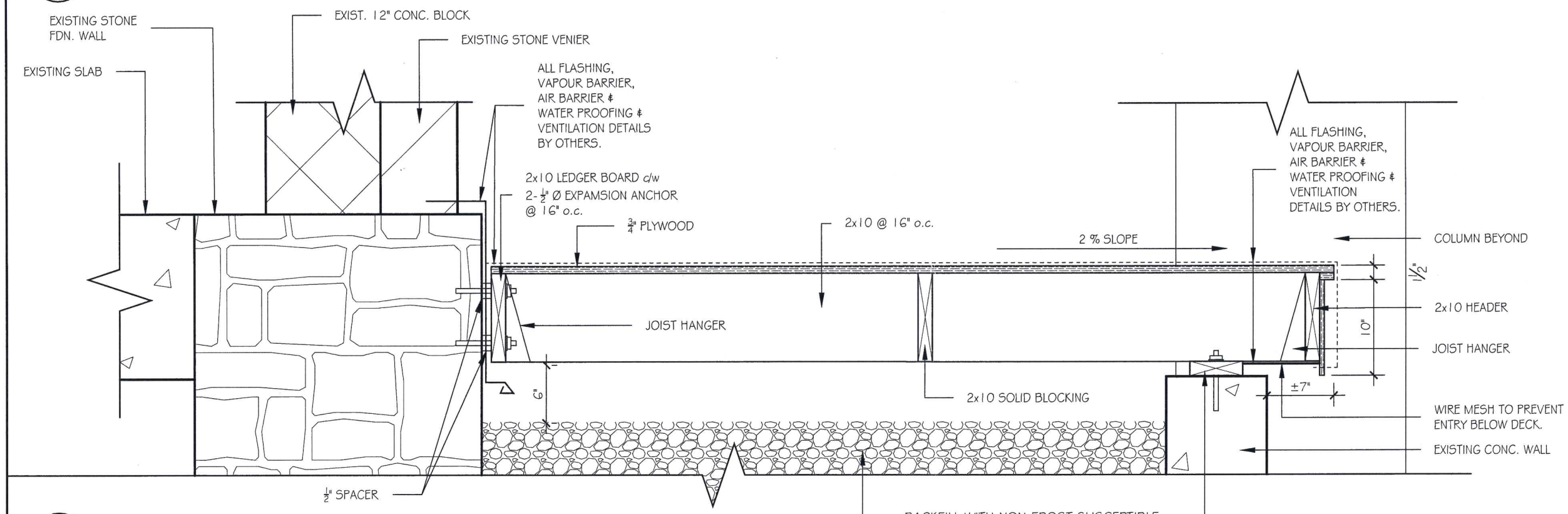

2 / SK6 SECTION@GROUND FLOOR SCALE 1"=1'-0"

GASCON ENGINEERING & STRUCTURAL DESIGN INC.

TEL: 343.999.4373
NOEL.GASCON@ROGERS.COM
WWW.GASCONESD.COM

CLIENT
Michanie Construction

LICENSED PROFESSIONAL ENGINEER
N.C.A. GASCON
90546920
1/10/2018
PROVINCE OF ONTARIO

NO	REVISION	DATE
1	ISSUED FOR REVIEW	8/31/2018
2	ISSUED FOR PERMIT	1/10/2018

PROJECT / LOCATION
BALCONY SLAB REPLACEMENT

2178 Laurier Ave
ROCKLAND, ONTARIO

DRAWING
SECTIONS

DESIGNED BY	APPROVED BY
Noel Gascon	NG
DRAWN BY: EA	SCALE: 1"=1'-0"
DATE: 31-AUG-2018	
PROJECT NO.: 2018-070	SHEET NO.: SK6

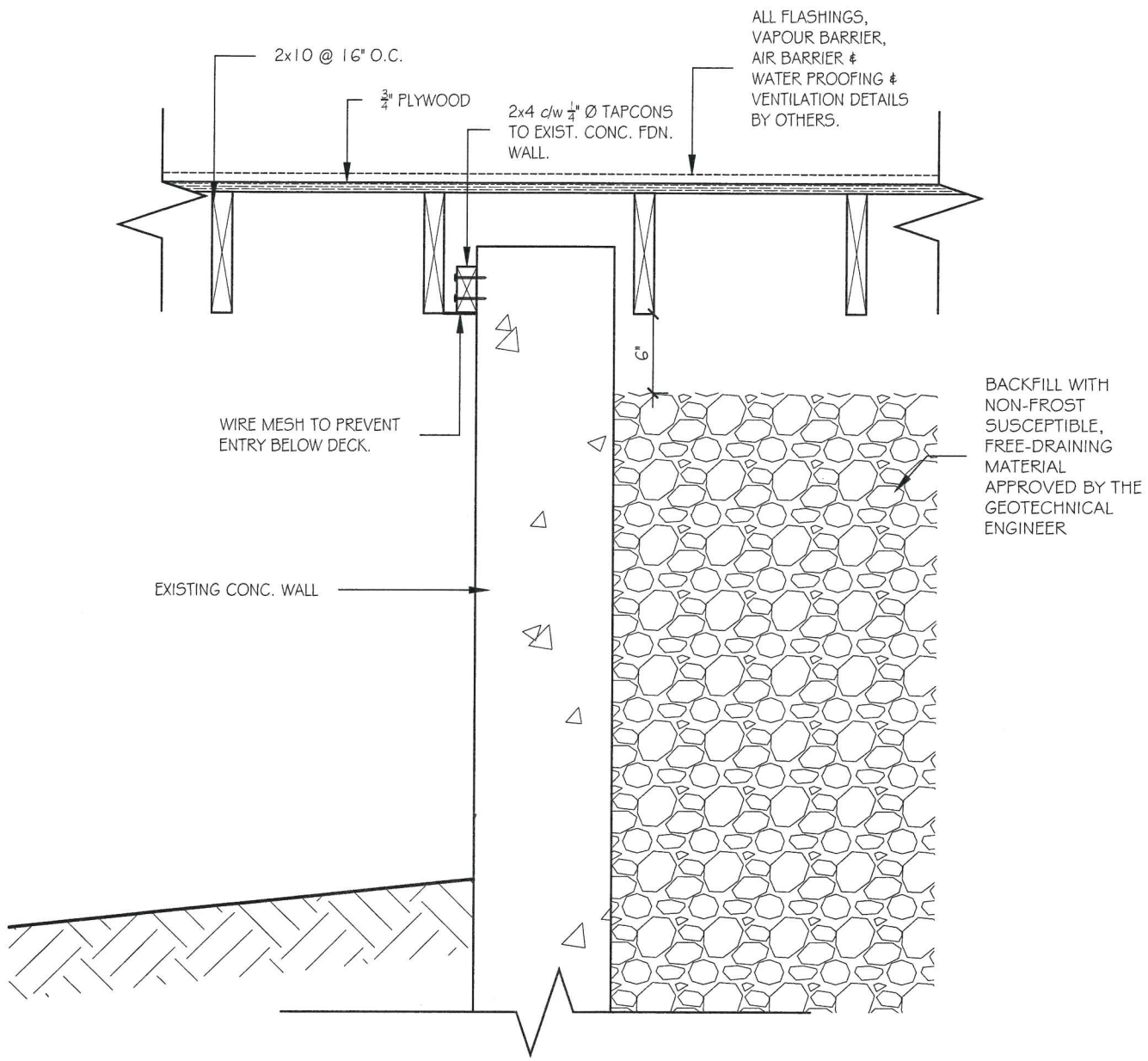

1 / SK7 SECTION SCALE 1"=1'-0"

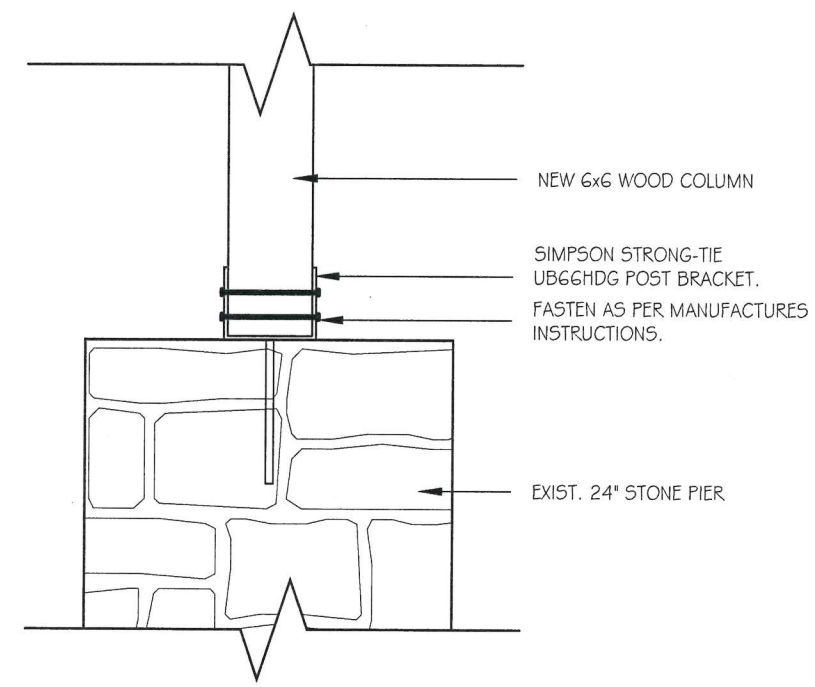

2 / SK7 WOOD COLUMN CONNECTION TO PIER SCALE 1"=1'-0"

GASCON ENGINEERING & STRUCTURAL DESIGN INC.
TEL: 343.999.4373
NOEL.GASCON@ROGERS.COM
WWW.GASCONESD.COM

CLIENT
Michanie Construction

LICENSED PROFESSIONAL ENGINEER
N.C.A. GASCON
90546920
1/10/2018
PROVINCE OF ONTARIO

NO	REVISION	DATE
1	ISSUED FOR REVIEW	8/31/2018
2	ISSUED FOR PERMIT	1/10/2018

PROJECT / LOCATION
BALCONY SLAB REPLACEMENT
2178 Laurier Ave
ROCKLAND, ONTARIO

DRAWING
SECTION

DESIGNED BY	APPROVED BY
Noel Gascon	NG
DRAWN BY: EA	SCALE: AS NOTED
DATE: 31-AUG-2018	
PROJECT NO. 2018-070	SHEET NO. SK7

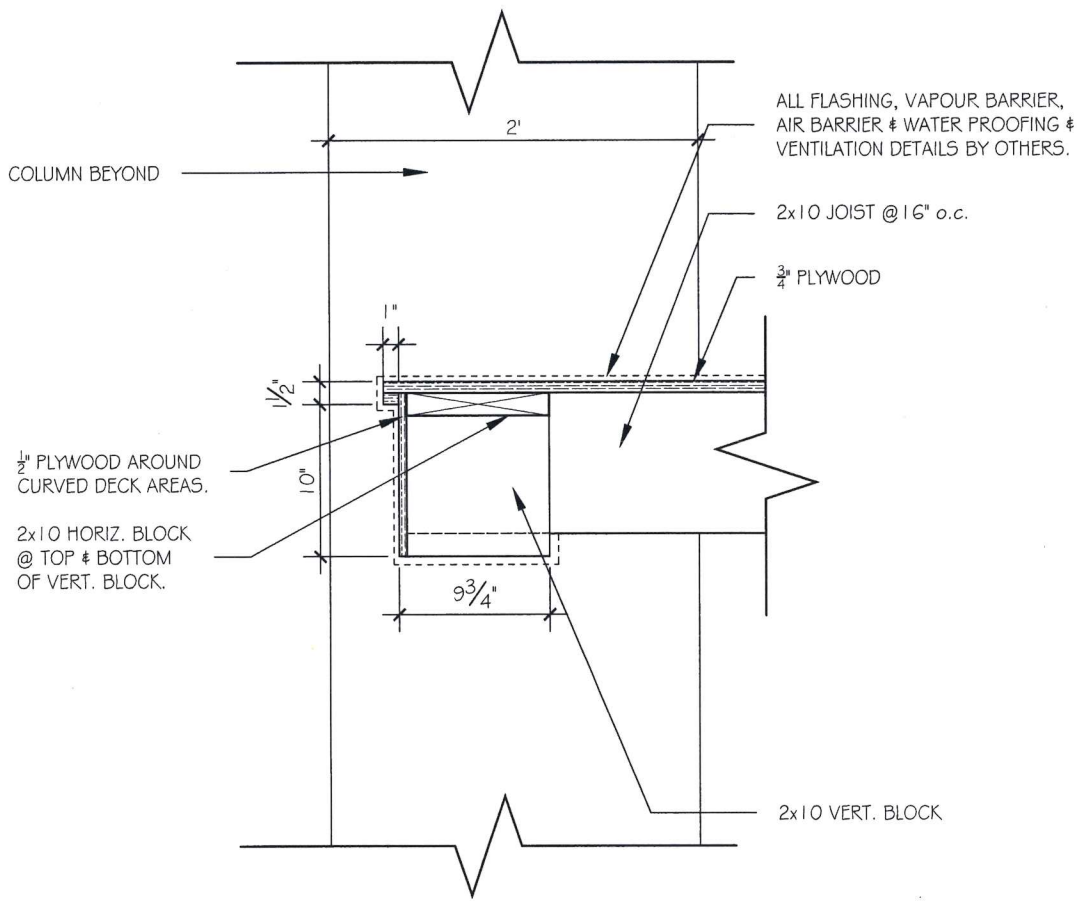

1 / SK8 GROUND FLOOR HANGOVER DETAIL@ CURVERD BALCONY SCALE 1"=1'-0"

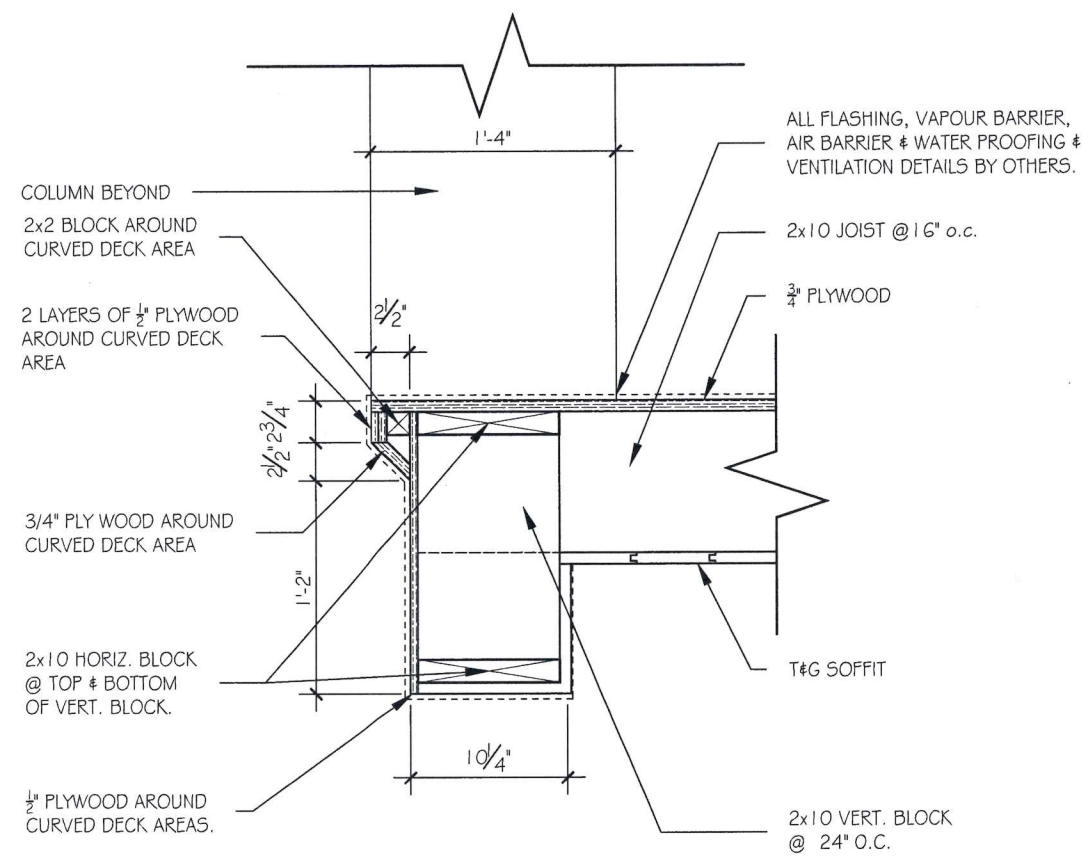

2 / SK8 SECOND FLOOR HANGOVER DETAIL@ CURVERD BALCONY SCALE 1"=1'-0"

GASCON ENGINEERING & STRUCTURAL DESIGN INC.

TEL: 343.999.4373
NOEL.GASCON@ROGERS.COM
WWW.GASCONESD.COM

CLIENT
Michanie Construction

LICENSED PROFESSIONAL ENGINEER
N.C.A. GASCON
90546920
1/10/2018
PROVINCE OF ONTARIO

NO	REVISION	DATE
1	ISSUED FOR REVIEW	8/31/2018
2	ISSUED FOR PERMIT	1/10/2018

PROJECT / LOCATION
BALCONY SLAB REPLACEMENT

2178 Laurier Ave
ROCKLAND, ONTARIO

DRAWING
SECTION

DESIGNED BY: Noel Gascon	APPROVED BY: NG
DRAWN BY: EA	SCALE: AS NOTED
DATE: 31-AUG-2018	
PROJECT NO.: 2018-070	SHEET NO.: SK8

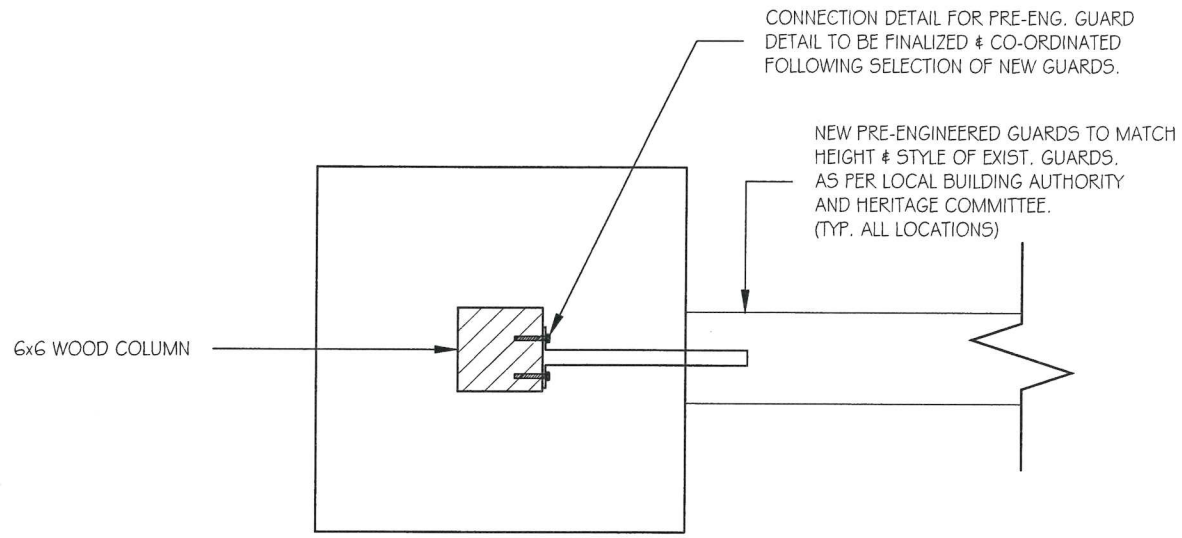

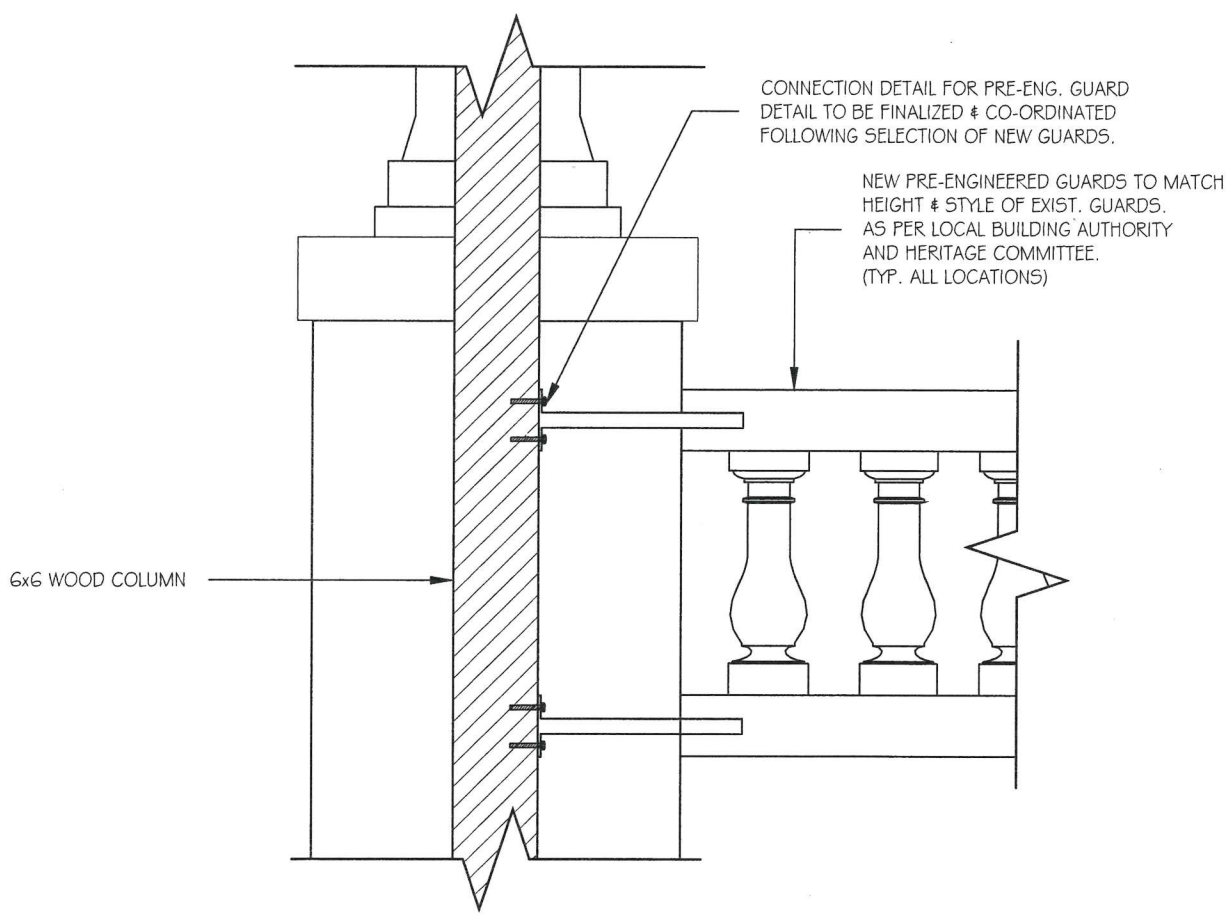

1 / SK9 GUARD'S CONNECTION DETAIL SCALE 1"=1'-0"

GENERAL NOTES:

1) ANY DEVIATION FROM CONDITIONS SHOWN ON THESE DRAWINGS, SHALL BE REPORTED TO THE ENGINEER PRIOR TO PROCEEDING WITH WORK.

2) DESIGN LOADS:
ROOF = 15 PSF (D) 36 PSF(S)
2ND FLOOR = 10 PSF (D) 100 PSF (L)
1ST FLOOR = 10 PSF (D) 100 PSF (L)

3) CONTRACTOR TO VERIFY EXISTING SERVICES AND SUPPORT AS REQUIRED. AS REQUIRED PRIOR TO EXCAVATION.

4) MATERIALS:
- A) WOOD TO BE SPF NO.2 OR BETTER.
- B) CONCRETE TO BE 20 MPA (3,000 PSI) @ 28 DAY STRENGTH.
- C) STRUCT. STEEL TO CSA G40.20/G40.21 -GRADE 350W
  CHANNELS GRADE 350W
  ANGLES GRADE 300W
- D) WELDING TO CSA W47.1 & W59
- E) CONC. BLOCK: f'_m= 15 MPA

5) ALL WORK TO BE IN CONFORMANCE WITH ONTARIO BUILDING CODE 2012

6) CONTRACTOR RESPONSIBLE FOR PROVIDING TEMPORARY SHORING TO COMPLETE WORK.

7) ALL PRE-MANUFACTURED PRODUCTS TO CONFORM TO & BE INSTALLED AS PER THE MANUFACTURERS SPECIFICATIONS AND INSTRUCTIONS.

8) SITE REVIEW OF STRUCTURAL ITEMS, AS NOTED ON THESE DRAWINGS, SHALL BE COORDINATED WITH GASCON ENGINEERING & STRUCTURAL DESIGN INC THROUGH THE DURATION OF THE PROJECT.

GASCON ENGINEERING & STRUCTURAL DESIGN INC.
TEL: 343.999.4373
NOEL.GASCON@ROGERS.COM
WWW.GASCONESD.COM

CLIENT
Michanie Construction

LICENSED PROFESSIONAL ENGINEER
N.C.A. GASCON
90546920
1/10/2018
PROVINCE OF ONTARIO

NO	REVISION	DATE
1	ISSUED FOR REVIEW	8/31/2018
2	ISSUED FOR PERMIT	1/10/2018

PROJECT / LOCATION
BALCONY SLAB REPLACEMENT
2178 Laurier Ave
ROCKLAND, ONTARIO

DRAWING
GUARD'S CONNECTION DETAIL
GENERAL NOTES

DESIGNED BY: Noel Gascon	APPROVED BY: NG
DRAWN BY: EA	SCALE: AS NOTED
DATE: 31-AUG-2018	
PROJECT NO.: 2018-070	SHEET NO.: SK9

REPORT N° FIN 2018-048

Date	21/12/2018
Submitted by	Frédéric Desnoyers
Subject	Budget status report – November 30, 2018
File N°	Click here to enter text.

1) **NATURE/GOAL :**
This report sets out the financial status of City operations for the period ending November 30, 2018.

2) **DIRECTIVE/PREVIOUS POLICY :**
N/A

3) **DEPARTMENT'S RECOMMENDATION :**
THAT Report No. FIN2018-048, being the financial operating budget status for the period ending November 30, 2018, be received as information.

QUE le rapport no. FIN2018-048, étant le rapport financier sur le budget opérationnel pour la période se terminant le 30 novembre, soit reçu à titre d'information.

4) **BACKGROUND :**
N/A

5) **DISCUSSION :**
Corporate revenues and expenses - $233,251 surplus
There is a surplus of $228,307 expected in the debt budget since room was created for future debt payments and the fire stations will only be debt financed in 2019. A $63,000 deficit is from lower revenues expected in the provincial offence revenues and a $7,500 deficit from local improvement revenues since the payments ended last year. A deficit of $160,475 is expected for payments to WSIB schedule 2, this item was never budgeted in the past. A $50,000 deficit is also planned from property taxes supplementary but additional revenues of $150,000 is expected from investment income. Property tax interest revenues will only be under budget by $8,000. A grant for source water protection was also included in the 2018 budget for $28,100 but should have been removed as it was a one-time funding for a 2017, therefore, causing a deficit. A write-off of 2 accounts payable was also completed in 2018 causing a surplus of $127,859. An additional revenue of $17,000 is caused by an HST review currently being completed. A saving of $23,000 is from the savings in insurance cost. In total the department is expecting a surplus of, $233,251. The

provincial offence act revenues, local improvements, interest in property taxes, source water protection grant and WSIB schedule 2 are all items that will be addressed in the 2019 budget discussions.

City Council - $18,068 surplus:
A saving of $18,068 is expected. A $13,000 is for salary savings due to the vacant position in ward 4 and $5,000 for savings on committees' expenses.

CAO - $88,600 surplus:
A saving of $88,600 is expected from the legal fees budget.

Finance & IT - $160,806 surplus:
The finance & IT department is expecting a surplus of $125,000 caused by vacant positions, $61,000 in finance and $64,000 in IT. The IT division is also expecting a saving of $35,000 from software, for a total departmental saving of $160,806.

Community Services - $67,171 deficit
The department is expecting a deficit of $67,171. The emergency repairs at the Arena in Clarence-Creek caused a deficit of $15,000. A deficit of $21,500 is also expected from the snow clearing contracts and $31,000 from severance pay.

Daycare Services - $11,104 surplus
The daycare services are expecting $110,000 additional revenues from one time grant funding. The department is also expecting higher salaries by $52,000 primarily caused by the use of part-time employees. As mention in report FIN2018-022, a third grant payment from the United Counties of Prescott Russell is budgeted at $125,000, only $60,000 will be received, causing a deficit of $65,000. A saving of $18,500 is also expected from food supplies.

Infrastructure and Planning – $ 28,229 deficit
The department is expecting a deficit of $171,500 in winter operations, $73,000 is for the purchase of salt and $98,500 for snow removal. The department is also expecting a deficit of $30,000 in gasoline and diesel purchase because of the increases in price but is expecting a saving of $33,000 in vehicle maintenance. A saving of $ 64,000 is expected from road maintenance (storm, patching, sweeping, grading, dust layer) Additional revenues from planning activities are expected, therefore reducing the total deficit to $28,229.

Public Transit – $0
The department is projecting $115,000 less revenues then budgeted. The department reviewed the services to reduce the bus contract by the same amount and now expect to be on budget.

Public Library – $2,192 surplus
The department is projecting $2,192 in surplus from multiple small variances.

Overall, the City is expecting a surplus of $413,621.

This surplus is calculated with a modified cash basis accounting. This method is the same used in the preparation of the budget. In the annual financial statements, the accrual accounting method will be used therefore creating a variance with the forecasted surplus.
The main differences are:
- Contribution to/from reserves and reserves funds
- Amortization of assets
- Disposition of assets
- Capital payments on long term debt and long term receivable
- Accrual for WSIB provision
- Repayment of internal loans

6) **CONSULTATION:**
N/A

7) **RECOMMENDATIONS OR COMMENTS FROM COMMITTEE/ OTHER DEPARTMENTS :**
N/A

8) **FINANCIAL IMPACT (expenses/material/etc.):**
In 2017, the municipality incurred a $465,576 deficit. The deficit was funded by the operating surplus and the tax stabilization reserve. The department will be recommending during the 2018 year-end report to use the 2018 surplus to fund the tax stabilization reserve and the operating surplus.

9) **LEGAL IMPLICATIONS :**
N/A

10) **RISK MANAGEMENT :**
N/A

11) **STRATEGIC IMPLICATIONS :**
N/A

12) **SUPPORTING DOCUMENTS:**
Appendix A - Operating Budget Status Report - Year-end (Surplus)/ Deficit Projection – As at November 30, 2018.

Annnexe A/ Schedule A

Rapport de budget 2018 /Budget Status Report

Year-end (Surplus)/ Deficit Projection

As at November 30

FOND GENERALE/ GENERAL FUND	Mois courante/ Current month 2017	Mois courante/ Current month 2018	2016 à date/ ytd	2017 à date/ ytd	2018 à date/ ytd	2018 BUDGET	PREVISION/ FORECAST	(SURPLUS)/ DEFICIT
Revenues et dépenses corporatifs/ Corporate Revenue and Expense	- 120,612	- 103,997	- 16,305,632	- 16,912,807	- 18,163,705	- 17,611,869	- 17,845,120	- 233,251
Conseil/ City Council	24,770	26,530	276,764	302,638	295,815	355,968	337,900	- 18,068
Bureau du Directrice générale/ Chief Administrative Officer	94,284	116,966	985,196	1,181,758	1,375,549	1,629,706	1,546,106	- 83,600
Finances/ Finance	112,713	203,210	1,364,030	1,370,208	1,471,317	1,735,412	1,574,606	- 160,806
Services communautaires/ Community Services	170,944	139,681	1,967,604	1,929,425	1,992,618	2,382,175	2,449,346	67,171
Services de garderie/ Day Care Services	36,117	74,989	- 49,903	312,525	- 204,594	84,545	73,441	- 11,104

Rapport de budget 2018 /Budget Status Report

Year-end (Surplus)/ Deficit Projection

As at November 30

FOND GENERALE/ GENERAL FUND	Mois courante/ Current month 2017	Mois courante/ Current month 2018	2016 à date/ ytd	2017 à date/ ytd	2018 à date/ ytd	2018 BUDGET	PREVISION/ FORECAST	(SURPLUS)/ DEFICIT
Service de la protection/ Protective Services	364,738	450,297	4,151,347	4,171,612	4,233,959	5,532,217	5,532,217	-
Infrastructure et urbanisme/ Infrastructure and Planning	266,465	366,666	4,011,769	4,578,976	4,042,354	4,783,704	4,811,933	28,229
Transport en commun/ Public Transit	68,284	98,408	434,909	453,667	474,343	447,000	447,000	-
City tax-supported	1,017,703	1,372,750	- 3,163,916	- 2,611,998	- 4,482,344	- 661,142	- 1,072,571	- 411,429
Biblioteque publique/ Public library	27,534	15,314	47,175	495,914	519,533	661,142	658,950	- 2,192
Supporté par les taxes/ Tax-supported	1,045,237	1,388,063	- 3,116,741	- 2,116,084	- 3,962,811	- 0	- 413,621	- 413,621

RAPPORT N° FIN2018-050

Date	24/12/2018
Soumis par	Frédéric Desnoyers
Objet	Tax Administration Policy
# du dossier	F22 Tax Rolls and Records

1) **NATURE / OBJECTIF :**
Le but de ce rapport est de mettre à jour la politique d'administration et collection des taxes foncière.

2) **DIRECTIVE/POLITIQUE ANTÉCÉDENTE :**
Règlement 2017-21 : Tax administration Policy, adoptée le 6 février 2017

3) **RECOMMANDATION DU SERVICE:**
Que le Comité plénier recommande au Conseil d'adopter la politique sur l'administration des taxes foncières révisée, tel que recommandé au rapport FIN2018-050.

That the Committee of Whole recommends that Council adopts the revised Tax Administration Policy, as recommended in report no. FIN2018-050.

4) **HISTORIQUE :**
Le 30 mai 2017, le projet de loi 68 est entré en vigueur.
Plusieurs petits changements ont été faits concernant la vente de taxe (Tax Sale).

5) **DISCUSSION :**
Actuellement, 9 propriétés sont éligibles pour la vente de taxe. Ceux-ci seront mis en vente au début du printemps, ainsi le département s'est assuré de révisé le règlement d'administration sur les taxes foncières. Plusieurs petits changements ont été apportés, tous les changements sont identifiés en jaune dans le nouveau règlement et le texte enlevé est identifié dans l'ancien règlement.
Parmi les changements majeurs, on retrouve :
- Le terme « Bailiff » a été supprimé puisque ceci n'est pas utilisé dans le processus.
- Le trésorier peut maintenant accepter des ententes de paiements et extensions.

Le projet de loi 68 permet dorénavant de réduire le délai de vente de taxe de 3 ans à 2 ans. Le règlement mis à jour ne reflète pas ceci puisque le changement n'est pas recommandé. Le département renforce le règlement municipal depuis seulement 1 an et demi et les

délais sont très élevés. Ainsi, encore aucune propriété n'a été vendue pour la vente de taxe.
De plus, réduire le délai a un impact important sur les revenus d'intérêts tirés sur les propriétés en arrérages. Le département estime à 75 000 $ la perte additionnelle de revenu d'intérêt causé par la réduction de ce délai.

6) **CONSULTATION :**
La firme « Tax Team Inc. / Tri-Target Inc. » a été consulté afin de mettre à jour ce règlement. Cette firme est actuellement utilisée à titre d'expert dans les dossiers de vente de taxes.

7) **RECOMMANDATION OU COMMENTAIRES DU COMITÉ :**
N/A

8) **IMPACT FINANCIER (monétaire/matériaux/etc.):**
L'approbation de cette politique mise à jour n'a aucun impact financier.

9) **IMPLICATIONS LÉGALES :**
N/A

10) **GESTION DU RISQUE (RISK MANAGEMENT) :**
B/A

11) **IMPLICATIONS STRATÉGIQUES :**
N/A

12) **DOCUMENTS D'APPUI:**
2017-21 – Tax Administration Policy
2018-XX – Revised Tax Administration Policy

CORPORATION OF THE CITY OF CLARENCE-ROCKLAND

By-law 2017-21

BEING A BY-LAW TO ESTABLISH A POLICY FOR EFFECTIVE AND EFFICIENT BILLING AND COLLECTION OF PROPERTY TAXES FOR THE CORPORATION OF THE CITY OF CLARENCE-ROCKLAND.

WHEREAS Part XI of the Municipal Act, 2001, as amended sets out the process for the "Sale of Land for Tax Arrears";

NOW THEREFORE BE IT RESOLVED THAT THE COUNCIL OF THE CORPORATION OF THE CITY OF CLARENCE-ROCKLAND ENACT AS FOLLOWS:

1. GENERAL PROVISIONS

The purpose of this by-law is:

1.1 To ensure that municipal tax revenues are collected in a timely and effective manner.

1.2 To ensure that all taxpayers are treated fairly and equitably and to provide staff guidance for decision-making.

1.3 The scope of this document is intended to cover all aspects of the billing and collection of property tax levies and any amounts added as taxes for collection.

2. DEFINITIONS

2.1 "**Bailiff**" means a duly appointed agent under contract with the City to recover outstanding Property Taxes.

2.2 "**Cancellation Price**" means an amount equal to all the tax arrears owing at any time in respect of land together with all current real property taxes owing, interest, penalties thereon, and all reasonable costs incurred by the City after the treasurer becomes entitled to register a tax arrears certificate under section 371

2.3 "**City**" is the Corporation of the City of Clarence-Rockland.

2.4 **"Collection Costs"** means all costs incurred by the City to obtain information for collection purposes and/or collect Tax Arrears including, but not limited to, title search fees, corporate search fees, registered or certified mail, administrative charges, legal costs and tax sale scale of costs.

2.5 **"Extension Agreement"** means a contract between the City and the owner, spouse of the owner, a mortgagee or a tenant in occupation to extend the period of time in which the Cancellation Price is to be paid. The contract is entered into after the registration of a Tax Arrears Certificate and before the expiry of the one-year period following the registration date.

2.6 **"Late Payment Charges"** means penalties and interest applied by the City to unpaid Property Tax accounts, in accordance with section 345 of the Act and applicable City by-laws.

2.7 **"Municipal Tax Sale"** means the sale of land for Tax Arrears according to proceedings prescribed by the Act and Ontario Regulation 181/03.

2.8 "**Notice of Vesting**" means a notice of vesting as prescribed by section 379 of the Act conferring title to the City where there has been no successful tender of a parcel of land and the sale has not been cancelled by the City Treasurer.

2.9 **"Property Taxes"** means the total amount of taxes for municipal and school purposes levied on a property and includes other amounts added to the tax roll as may be permitted by applicable Provincial legislation, including but not limited to outstanding fines under the Provincial Offences Act.

2.10 "**Tax Deed**" is a tax deed as prescribed by Section 379 of the Act and includes the title conferred by the registration of the deed, that which is provided to the successful purchaser of the property after payment of the balance of the Purchase Price.

2.11 **"Tax Arrears"** means any portion of Property Taxes that remain unpaid after the date on which they are due.

2.12 **"Tax Arrears Certificate"** means a document that is registered on title, indicating the described property will be sold by public sale if all Property Taxes are not paid to the municipality within one year of the registration of the certificate.

3. ACCOUNTABILITY AND RESPONSIBILITY

3.1 **The Director, Finance and Economic Development is responsible to:**
Ensure that outstanding Property Tax collection processes are performed in accordance with this policy and all applicable legislation.

3.2 **The Tax Analyst / Collector, is responsible to:**

3.2.1 Ensure this policy remains consistent with current legislation

3.2.2 Ensure applicable staff are aware of and trained on this policy

3.2.3 Communicate any policy revisions to applicable staff, and

3.2.4 Assess overdue property tax accounts to ensure tax collection processes are performed in accordance with this policy

4. PROCEDURES

Section 5: Tax Billings
Section 6: Penalty/ Interest (Late Payment/ Overdue Charges)
Section 7: Tax Arrears – Collection Process
Section 8: Property Tax Sales Process

5. TAX BILLINGS

5.1 **Interim**: The City will bill for Interim Taxes in February of each year. Billings will be calculated, printed and mailed in accordance

with Provincial Legislation. The first due date must be at least twenty-one (21) days after the date of mailing of the tax bill.

5.1.1 **Regular tax accounts** – payment will be due in two (2) instalments[1], unless unusual or unforeseen administrative, technical or legislative issues result in delay of the interim billing process

5.1.2 **PTP** Tax Accounts - payment will be due in either a maximum of six (6) payments in the months of January through June or on the same date as the Regular Tax Accounts, depending on which PTP option the taxpayer has selected.

5.2 **Final**: The City will issue Final Tax bills subsequent to approved budgets, requisitions and/or rates of all entities for which the City is required to levy and collect. The first due date must be at least twenty-one (21) days after the date of mailing of the tax bill

5.2.1 **Regular tax accounts** –Residential- payment will be due in two (2) instalments and also Commercial- payment will be due in two (2) instalments , unless unusual or unforeseen administrative, technical or legislative issues result in delay of the interim billing process

5.2.2 **PTP** Tax Accounts - payment will be due in either a maximum of six (6) payments in the months of July through December or on the same date as the Regular Tax Accounts, depending on which PTP option the taxpayer has selected.

5.3 **SUPPLEMENTARY TAX BILLINGS**: The Municipal Property Assessment Corporation (MPAC) regularly provides additional assessment data on properties necessitating a supplementary billing. The City will bill for these additional (supplementary) assessments as soon as practical after receipt of the data from MPAC. A maximum of three (2) instalments may be allowed for supplementary billings where the tax account is not on PTP.

[1] Actual due dates will be established by Council through City By-law.

Where the account is on PTP a maximum of six (6) instalments may be allowed. Whether the account is Non-PTP or PTP there will be no difference with regard to the total time allowed to complete payment of the full tax amounts. Due dates will be established, so as not to overlap with any previous billing due date(s), where practical. The first due date must be at least twenty-one (21) days after the date of mailing of the supplementary tax bill.

6. PENALTY/ INTEREST (Late Payment/ Overdue Charges)

6.1 All Tax Arrears are subject to Late Payment Charges. A penalty at a rate established by by-law is added to the unpaid amount of a tax instalment on the first day after the instalment due date. In addition, as long as the Property Taxes remain unpaid, interest at a rate established by by-law is added on the first day of each month thereafter. Penalty and interest charges cannot be waived. All Collection Costs incurred by the City to obtain information for collection purposes and/or collect Tax Arrears are payable by the property owner and are added to the tax account, with the exception of Bailiff fees, which are charged and collected by the Bailiff directly.

7. TAX ARREARS – COLLECTION PROCESS – ONGOING STEPS

7.1 Property taxes are a secured special lien on land in priority to any other claim, except a claim by the Crown. Taxes may be recovered with costs as a debt due to the City from the original owner and/or any subsequent owner of the property.

7.2 Property tax payments are applied as follows:

7.2.1 The payment is first applied against any Late Payment Charges according to the length of time the charges have been outstanding, with the charges that have been outstanding the longest being discharged first

7.2.2 The payment is then applied in the same manner against the Property Taxes owing, with the Property Taxes that have been outstanding the longest being discharged first

7.3 The City will primarily use the following methods to collect Tax Arrears:

7.3.1 **Verbal communication**

7.3.2 **Overdue notices -** A minimum of one Overdue Notice will be issued each year following the last Final Billing instalment. Overdue Notices will be sent to all taxpayers with an overdue amount greater than ten ($10.00) dollars

7.3.3 **Payment arrangements** - Staff may enter into payment arrangements at any time prior to the registration of a Tax Arrears Certificate. Payment arrangements must include all Tax Arrears, current taxes, accruing estimates of future taxes and Late Payment Charges and be sufficient to ensure payment in full is realized within a reasonable period of time. Late Payment Charges will continue to accrue during all such payment arrangements until full payment on the account has been made. Postdated cheques or Preauthorized Payment Plan are the preferred methods of payment.

8. MUNICIPAL TAX SALES PROCESS

8.1 Municipal Tax Sale Notices

8.1.1 **Final Notice-Prior to Tax Sale** - In the fourth quarter of each year, Final Notices-Prior to Tax Sale are mailed to those residential property owners approaching three years of Property Taxes in arrears. The Final Notice-Prior to Tax Sale advises that they have thirty (30) days to pay the taxes or enter into a firm, suitable payment arrangement with the City.

8.1.2 **Notice to Interested Parties** - If a residential property owner fails to respond to the Final Notice-Prior to Tax Sale, a property title search is carried out by the City in order to identify all parties with a financial interest in the property. The identified parties are then notified of the Tax Arrears. The Notice to Interested Parties advises that the City intends to proceed with a Municipal Tax Sale and provides interested parties with an opportunity to pay the arrears in order to protect their interest in the property.

8.1.3 **Final Notice-Prior to Tax Arrears Certificate Registration** - If neither the property owner nor interested parties respond to the previous notices, a Final Notice-Prior to Tax Arrears Certificate Registration is issued as one last notification to the property owner of their outstanding balance prior to proceeding with a Municipal Tax Sale.

The Final Notice-Prior to Tax Arrears Certificate Registration advises the property owner that they have 30 days to pay their taxes or enter into a firm, suitable arrangement with the City. Otherwise, the City will register a Tax Arrears Certificate against their property.

8.1.4 **Tax Arrears Certificate Registration** - Municipal Tax Sale proceedings can begin once taxes have been in arrears for at least three years. Once all other collection efforts are exhausted and the City has been unable to secure payment of the Tax Arrears or a firm, suitable repayment plan, the City commences Municipal Tax Sale proceedings by registering a Tax Arrears Certificate against the property.

The City sends a Notice of Registration of Tax Arrears Certificate to the property owner and all interested parties. If full payment is not received within 280 days of registration of the Tax Arrears Certificate, the City issues a Final Notice to the property owner and all interested parties within 30 days after the expiry of the 280-day period. The notice specifies the date on which the property will be advertised for public sale if the Tax Arrears are not paid or unless Council has approved an Extension Agreement.

If the City does not receive a response, the account will be sent to the Bailiff to perform a site visit and advise the property owner, mortgage company, lawyer or interested parties of the pending sale of the property and attempt collection. Once a Tax Arrears Policy Certificate has been registered, only full payment of the Cancellation Price will be accepted unless Council has approved an Extension Agreement.

Full payment will be accepted up to the date of transfer of the property following a sale. In the event of non-payment, the City will proceed with a Municipal Tax Sale.

8.2 Municipal Tax Sale Tender Process

8.2.1 A Tax Sale of any property is subject to cancellation up to the time of the tender opening without any further notice.

8.2.2 The minimum bid is the Cancellation Price.

8.2.3 A separate tender must be provided for each property bid on and must be in the form provided (Form 7 Tender of Purchase). No substitutes can be accepted. There is a fee for each tender package requested.

8.2.4 The tender must be accompanied by a deposit of at least 20% of the tender/bid amount (NOT the Cancellation Price amount) by way of money order, bank draft, or certified cheque payable to the CITY OF CLARENCE-ROCKLAND.

8.2.5 The City is not obliged to provide a survey or reference plan for any parcel of land being sold under tax sale. The Assessment Maps, provided as a courtesy, hereto are not surveys and may be used for approximate location purposes only.

8.2.6 The City Treasurer is not obliged to inquire into the value of land prior to conducting a sale. Further, there is no obligation to obtain fair market value for the land or to ensure that land being sold under tax sale may obtain fair market value at the time of the sale or in the future.

8.2.7 Prior to submitting a tender, the onus is on the potential bidder to conduct his/her own inquiries into such matters as zoning, access, work orders, water/hydro and other arrears, building restriction, title problems and/or liens, which may survive the tax sale. The City makes no representations whatever as to the quality and/or quantity of the land being purchased.

8.2.8 Potential bidders are further advised that a lawyer should be retained in order to ensure that his/her interests are protected prior to the submission of a bid/tender.

8.2.9 The City does not conduct tours or provide access to properties being sold under tax sale.

8.2.10 The City does not provide legal opinions to potential bidders in respect of issues, which may arise in the context of a public sale.

8.2.11 If two bids of equal amount are tendered, then the person who submitted the earlier bid will be deemed to be the higher bidder.

8.2.12 The successful tender is the highest bidder who has submitted a properly completed tender and who makes payment within fourteen calendar days of being notified by mail of the balance of the amount tendered, the appropriate land transfer tax, and accumulated taxes to the City.

8.2.13 Land Transfer Tax is an amount payable to the Minister of Finance by certified cheque, cash or money order,

8.2.14 If the highest bidder does not submit the remaining funds as described, then the highest bidder's deposit is forfeited and the land is offered in the same manner to the second highest bidder who then has fourteen calendar days from date of notification to remit the monies owing to the City. Failure by the second highest bidder to submit the remaining funds will also result in their deposit being forfeited to the City.

8.2.15 If there is no successful bidder, then the lands may vest in the City and the City may register a Notice of Vesting in favour of the City within one year from the date of the failed Tax Sale.

8.2.16 A Tax Deed, which is provided to the successful purchaser at the time when the balance of the Cancellation Price is paid, provides to the purchaser title to the land in "fee simple" subject only to:

- Easements and restrictive covenants; and
- Estates and interest of the Crown in Right of Canada or the Province of Ontario
  (e.g. Execution in favour of the Ministry of Finance); and
- Adverse possession interests by abutting owners, if any.

8.2.17 The City is not required to provide vacant possession of any properties, which may be occupied, and accordingly, should the purchaser require vacant possession, a court application, at his or her cost may be required in order to obtain a Writ of Possession. Further the City does not have a key to the property and is not in a position to provide one to the purchaser. This is the responsibility of the purchaser.

- Note: The City reserves the right to cancel any property from the tax sale up to the time of closing of the Tender, without any further notice or costs to the City.

8.2.18 Please ensure that the Tender Envelope and Tender Document are accurately and entirely completed including identifying the property that you are bidding on, your name and a phone number to reach you during business hours.

- Note: If you have submitted a bid and the property has been cancelled from the sale, or you are not the successful bidder, you can only receive your bid documents and deposit with appropriate identification after the tenders are opened and the bids for the tax sale properties finalized. After this time you will be contacted about how your deposit and documents will be returned.

Read a first, second and third time and passed this 6th day February 2017.

Guy Desjardins, Mayor

Monique Ouellet, Clerk

THE CORPORATION OF THE CITY OF CLARENCE-ROCKLAND

BY-LAW NUMBER 2018-XX

BEING A BY-LAW TO ESTABLISH A POLICY FOR EFFECTIVE AND EFFICIENT BILLING AND COLLECTION OF PROPERTY TAXES FOR THE CORPORATION OF THE CITY OF CLARENCE-ROCKLAND.

WHEREAS Part XI of the Municipal Act, 2001, as amended sets out the process for the "Sale of Land for Tax Arrears";

NOW THEREFORE BE IT RESOLVED THAT THE COUNCIL OF THE CORPORATION OF THE CITY OF CLARENCE-ROCKLAND ENACT AS FOLLOWS:

1. **GENERAL PROVISIONS**
The purpose of this by-law is:

1.1 To ensure that municipal tax revenues are collected in a timely and effective manner.

1.2 To ensure that all taxpayers are treated fairly and equitably and to provide staff guidance for decision-making.

1.3 The scope of this document is intended to cover all aspects of the billing and collection of property tax levies and any amounts added as taxes for collection.

2. DEFINITIONS

2.1 **"Cancellation Price"** means an amount equal to all the tax arrears owing at any time in respect of land together with all current real property taxes owing, interest, penalties thereon, and all reasonable costs incurred by the City after the treasurer becomes entitled to register a tax arrears certificate under section 371.

2.2 **"City"** is the Corporation of the City of Clarence-Rockland.

2.3 **"Collection Costs"** means all costs incurred by the City to obtain information for collection purposes and/or collect Tax Arrears including, but not limited to, title search fees, corporate search fees, registered or certified mail, administrative charges, legal costs and tax sale scale of costs.

2.4 **"Extension Agreement"** means a contract between the City with any owner of the land, the spouse of any owner, any mortgagee, any tenant in occupation of the land, or any person the treasurer is satisfied has an interest in the land before the expiry of the one-year period to extend the period of time in which the Cancellation Price is to be paid. The contract is entered into after the registration of a Tax Arrears Certificate and before the expiry of the one-year period following the registration date.

2.5 **"Late Payment Charges"** means penalties and interest applied by the City to unpaid Property Tax accounts, in accordance with section 345 of the Act and applicable City by-laws.

2.6 **"Municipal Tax Sale"** means the sale of land for Tax Arrears according to proceedings prescribed by the Act and Ontario Regulation 181/03.

2.7 **"Notice of Vesting"** means a notice of vesting as prescribed by section 379 of the Act conferring title to the City where there has been no successful tender of a parcel of land and the sale has not been cancelled by the City Treasurer.

2.8 **"Property Taxes"** means the total amount of taxes for municipal and school purposes levied on a property and includes other amounts added to the tax roll as may be permitted by applicable Provincial legislation, including but not limited to outstanding fines under the Provincial Offences Act.

2.9 **"Tax Deed"** is a tax deed as prescribed by Section 379 of the Act and includes the title conferred by the registration of the deed, that which is provided to the successful purchaser of the property after payment of the balance of the Purchase Price.

2.10 **"Tax Arrears"** means any portion of Property Taxes that remain unpaid after the date on which they are due.

2.11 **"Tax Arrears Certificate"** means a document that is registered on title, indicating the described property will be sold by public sale if all Property Taxes are not paid to the municipality within one year of the registration of the certificate.

3. ACCOUNTABILITY AND RESPONSIBILITY

3.1 **The Director, Finance and Economic Development and/or Treasurer is responsible to:**

Ensure that outstanding Property Tax collection processes are performed in accordance with this policy and all applicable legislation.

3.2 **The Tax Analyst/ Collector, is responsible to:**

3.2.1 Ensure this policy remains consistent with current legislation

3.2.2 Ensure applicable staff are aware of and trained on this policy

3.2.3 Communicate any policy revisions to applicable staff, and

3.2.4 Assess overdue property tax accounts to ensure tax collection processes are performed in accordance with this

policy

4. PROCEDURES

Section 5: Tax Billings
Section 6: Penalty/ Interest (Late Payment/ Overdue Charges)
Section 7: Tax Arrears - Collection Process
Section 8: Property Tax Sales Process

5. TAX BILLINGS

5.1 **Interim:** The City will bill for Interim Taxes in February of each year. Billings will be calculated, printed and mailed in accordance with Provincial Legislation. The first due date must be at least twenty-one (21) days after the date of mailing of the tax bill.

5.1.1 **Regular tax accounts** - payment will be due in two (2) instalments, unless unusual or unforeseen administrative, technical or legislative issues result in delay of the interim billing process.

5.1.2 **PTP** Tax Accounts - payment will be due in either a maximum of six (6) payments in the months of January through June or on the same date as the Regular Tax Accounts, depending on which PTP option the taxpayer has selected.

5.2 **Final:** The City will issue Final Tax bills subsequent to approved budgets, requisitions and/or rates of all entities for which the City is required to levy and collect. The first due date must be at least twenty-one (21) days after the date of mailing of the tax bill.

5.2.1 **Regular tax accounts** -Residential- payment will be due in two (2) instalments and also Commercial- payment will be due in two (2) instalments, unless unusual or unforeseen administrative, technical or legislative issues result in delay of the interim billing process.

5.2.2 **PTP (pre-authorized tax payment)** Tax Accounts - payment will be due in either a maximum of six (6) payments in the months of July through December or on the same date as the Regular Tax Accounts, depending on which PTP option the taxpayer has selected.

5.3 **SUPPLEMENTARY TAX BILLINGS:** The Municipal Property Assessment Corporation (MPAC) regularly provides additional assessment data on properties necessitating a supplementary billing. The City will bill for these additional (supplementary) assessments as soon as practical after receipt of the data from MPAC. A maximum of two (2) instalments may be allowed for supplementary billings where the tax account is not on PTP.

Where the account is on PTP a maximum of six (6) instalments may be allowed. Whether the account is Non-PTP or PTP there will be no difference with regard to the total time allowed to complete payment of the full tax amounts. Due dates will be established, so as not to overlap with any previous billing due date(s), where practical. The first due date must be at least twenty-one (21) days after the date of mailing of the supplementary tax bill.

6. PENALTY/ INTEREST (Late Payment/ Overdue Charges)

6.1 All Tax Arrears are subject to Late Payment Charges. A penalty at a rate established by by-law is added to the unpaid amount of a tax instalment on the first day after the instalment due date. In addition, as long as the Property Taxes remain unpaid, interest at a rate established by by-law is added on the first day of each month thereafter. Penalty and interest charges cannot be waived. All Collection Costs incurred by the City to obtain information for collection purposes and/or collect Tax Arrears are payable by the property owner and are added to the tax account.

7. TAX ARREARS - COLLECTION PROCESS - ONGOING STEPS

7.1 Property taxes are a secured special lien on land in priority to any other claim, except a claim by the Crown. Taxes may be recovered with costs as a debt due to the City from the original owner and/or any subsequent owner of the property.

7.2 Property tax payments are applied as follows:

7.2.1 The payment is first applied against any Late Payment Charges according to the length of time the charges have been outstanding, with the charges that have been outstanding the longest being discharged first.

7.2.2 The payment is then applied in the same manner against the Property Taxes owing, with the Property Taxes that have been outstanding the longest being discharged first.

7.3 The City will primarily use the following methods to collect Tax Arrears:

7.3.1 **Verbal communication**

7.3.2 **Overdue notices** - A minimum of one Overdue Notice will be issued each year following the last Final Billing instalment. Overdue Notices will be sent to all taxpayers with an overdue amount greater than ten ($10.00) dollars.

7.3.3 **Payment arrangements** - Staff may enter into payment arrangements at any time prior to the registration of a Tax Arrears Certificate. Payment arrangements must include all Tax Arrears, current taxes, accruing estimates of future taxes and Late Payment Charges and be sufficient to ensure payment in full is realized within a reasonable period of time. Late Payment Charges will continue to accrue during all

such payment arrangements until full payment on the account has been made. Postdated cheques or Preauthorized Payment Plan are the preferred methods of payment.

8. MUNICIPAL TAX SALES PROCESS

8.1 **Municipal Tax Sale Notices**

8.1.1 **Final Notice-Prior to Tax Sale** - In the fourth quarter of each year, Final Notices-Prior to Tax Sale are mailed to those residential property owners approaching three years of Property Taxes in arrears. The Final Notice-Prior to Tax Sale advises that they have thirty (30) days to pay the taxes or enter into a firm, suitable payment arrangement with the City.

8.1.2 **Notice to Interested Parties** - If a residential property owner fails to respond to the Final Notice-Prior to Tax Sale, a property title search is carried out by the City in order to identify all parties with a financial interest in the property. The identified parties are then notified of the Tax Arrears. The Notice to Interested Parties advises that the City intends to proceed with a Municipal Tax Sale and provides interested parties with an opportunity to pay the arrears in order to protect their interest in the property.

8.1.3 **Final Notice-Prior to Tax Arrears Certificate Registration** - If neither the property owner nor interested parties respond to the previous notices, a Final Notice-Prior to Tax Arrears Certificate Registration is issued as one last notification to the property owner of their outstanding balance prior to proceeding with a Municipal Tax Sale.

The Final Notice-Prior to Tax Arrears Certificate Registration advises the property owner that they have 30 days to pay their taxes or enter into a firm, suitable arrangement with the City. Otherwise, the City will register a Tax Arrears Certificate against their property.

8.1.4.1 **Tax Arrears Certificate Registration** - Municipal Tax Sale proceedings can begin once taxes have been in arrears for at least three years. Once all other collection efforts are exhausted, and the City has been unable to secure payment of the Tax Arrears or a firm, suitable repayment plan, the City commences Municipal Tax Sale proceedings by registering a Tax Arrears Certificate against the property.

The City causes a Notice of Registration of Tax Arrears Certificate to be sent to the property owner and all interested parties. If full payment is not received within 280 days of registration of the Tax Arrears Certificate, the City issues a Final Notice to the property owner and all interested parties within 30 days after the expiry of the 280-day period. The notice specifies the date on which the property will be advertised for public sale if the Tax Arrears are not paid or unless the City treasurer agrees to enter into an Extension Agreement.

Once a Tax Arrears Certificate has been registered, only full payment of the Cancellation Price will be accepted unless the City treasurer agrees to enter into an Extension Agreement.

Full payment will be accepted up to the date of transfer of the property following a tax sale. In the event of nonpayment, the City will proceed with a Municipal Tax Sale.

8.1.4.2 **Tax Arrears Certificate Registration of Forfeited Corporate Property** - Municipal Tax Sale proceedings can begin at any time when the property taxes are in arrears. Once all other collection efforts are exhausted, and the City has been unable to secure payment of the Tax Arrears or a firm, suitable repayment plan, the City commences Municipal Tax Sale proceedings by registering a Tax Arrears Certificate against the property.

The City causes a Notice of Registration of Tax Arrears Certificate to be sent to the property owner and all interested parties.. If full payment is not received within 90 days of registration of the Tax Arrears Certificate, the property will be advertised for public sale if the Tax Arrears are not paid or unless the City treasurer agrees to enter into an Extension Agreement. An Extension Agreement can only be entered into if the property owns first obtains consent from The Ministry of Infrastructure to do so.

Once a Tax Arrears Certificate has been registered, only full payment of the Cancellation Price will be accepted unless the Ministry of Infrastructure and the City treasurer agree to enter into an Extension Agreement.

Full payment will be accepted up to the date of transfer of the property following a tax sale. In the event of nonpayment, the City will proceed with a Municipal Tax Sale.

8.2 **Municipal Tax Sale Tender Process**

8.2.1 A Tax Sale of any property is subject to cancellation up to the time of the registration of a Tax Deed or Notice of Vesting without any further notice. If the Cancellation Price is paid before that time, a Cancellation Certificate will be registered. If the Cancellation Price is paid by a party entitled to notice under the Act, they are entitled to a lien on the Cancellation Certificate for the amount they paid. However, if the Cancellation Price paid on a forfeited corporate property which has vested to the Crown, or a property belonging to the Crown belongs to the Crown as a result of the death of an individual who did not have any lawful heirs, they are not entitled to a lien on the Cancellation Certificate for the amount they paid.

8.2.2 The minimum bid is the Cancellation Price.

8.2.3 A separate tender must be provided for each property bid on and must be in the form provided (Form 7 Tender to Purchase). No substitutes can be accepted. There is a fee for each tender package requested.

8.2.4 The tender must be accompanied by a deposit of at least 20% of the tender/bid amount (NOT the Cancellation Price amount) by way of money order or by way of bank draft or cheque certified by a bank or authorized foreign bank within the meaning of section 2 of the *Bank Act* (Canada), a trust corporation registered under the *Loan and Trust Corporations Act* or a credit union within the meaning of the *Credit Unions and Caisses Populaires Act, 1994* payable to the CITY OF CLARENCE-ROCKLAND.

8.2.5 The City is not obliged to provide a survey or reference plan for any parcel of land being sold under tax sale. The Assessment Maps, provided as a courtesy, hereto are not surveys and may be used for approximate location purposes only.

8.2.6 The City Treasurer is not obliged to inquire into the value of land prior to conducting a sale. Further, there is no obligation to obtain fair market value for the land or to ensure that land being sold under tax sale may obtain fair market value at the time of the sale or in the future.

8.2. 7 Prior to submitting a tender, the onus is on the potential bidder to conduct his/her own inquiries into such matters as zoning, access, work orders, water/hydro and other arrears, building restriction, title problems and/or liens, which may survive the tax sale. The City makes no representations whatever as to the quality and/or quantity of the land being purchased.

8.2.8 Potential bidders are further advised that a lawyer should be retained in order to ensure that his/her interests are protected prior to the submission of a bid/tender.

8.2.9 The City does not conduct tours or provide access to properties being sold under tax sale. The City is not permitted to enter onto the lands being advertised without the owners' consent.

8.2.10 The City does not provide legal opinions to potential bidders in respect of issues, which may arise in the context of a public sale.

8.2.11 If two bids of equal amount are tendered, then the person who submitted the earlier bid will be deemed to be the higher bidder.

8.2.12 The successful tender is the highest bidder who has submitted a properly completed tender and who makes payment within fourteen calendar days of being notified by mail of the balance of the amount tendered, the appropriate land transfer tax, and accumulated taxes to the City.

8.2.13 Land Transfer Tax is an amount payable to the Minister of Finance by certified cheque, cash or money order.

8.2.14 If the highest bidder does not submit the remaining funds as described within fourteen calendar days from date of notification to remit the balance owing to the City, then the highest bidder's deposit is forfeited to the City and the land is offered in the same manner to the second highest bidder who then has fourteen calendar days from date of notification to remit the balance owing to the City. Failure by the second highest bidder to submit the remaining funds will also result in their deposit being forfeited to the City.

8.2.15 If there is no successful bidder, then within two years of the date of the public sale, the City may either:

- offer the lands for tax sale a second time, or
- vest in the City and the City may register a Notice of Vesting in favour of the City within two years from the date of the failed Tax Sale. If the City does not vest the land within those two years, the Tax Arrears Certificate will be deemed to be cancelled.

8. 2.15.1 A Notice of Vesting, provides to the City title to the land in "fee simple" free from all estates ands interests of the Crown in right of Ontario, except:

- Easements and restrictive covenants;
- Estates and interest of the Crown in Right of Canada;
- Adverse possession interests by abutting owners, if any.

8. 2.16 A Tax Deed, which is provided to the successful purchaser once the balance of the Cancellation Price is paid, provides to the purchaser title to the land in "fee simple" subject only to:

- Easements and restrictive covenants;
- Estates and interest of the Crown in Right of Canada or the Province of Ontario (e.g. Execution in favour of the Ministry of Finance);
- is vested in the Crown in right of Ontario because of an escheat or forfeiture as a result of the dissolution of a corporation, or belongs to the Crown in right of Ontario as a result of the death of an individual who did not have any lawful heirs; and
- Adverse possession interests by abutting owners, if any.

8.2.17 The City is not required to provide vacant possession of any properties, which may be occupied, and accordingly, should the purchaser require vacant possession, a court application, at his or her cost may be required in order to obtain a Writ of Possession. Further the City does not have a key to the property and is not in a position to provide one to the purchaser. This is the responsibility of the purchaser.

• Note: The City reserves the right to cancel any property from the tax sale up to the time of closing of the Tender, without any further notice or costs to the City.

8.2.18 Please ensure that the Tender Envelope and Tender Document are accurately and entirely completed including identifying the property that you are bidding on, your name and a phone number to reach you during business hours.

• Note: If you have submitted a bid and the property has been cancelled from the sale, or you are not the successful bidder, you can only receive your bid documents and deposit with appropriate identification after the tenders are opened and the bids for the tax sale properties finalized. After this time, you will be contacted about how your deposit and documents will be returned.

9. That By-Law Number 2017-21 is hereby repealed.

READ AND PASSED IN OPEN COUNCIL THIS XX DAY OF FEBRUARY 2018.

_____	_____
Guy Desjardins, Mayor	**Monique Ouellet, Clerk**

PLANNING AND CONSTRUCTION DEPARTMENT
Construction Division

Month / Mois	Total of building permits issued / Total des permis de construction émis	Total permits issued Rockland / Total permis émis Rockland	Total permits issued Villages / Total permis émis villages	Total permits issued in rural and agricultural area / Total permis émis - région rurale et agricole	Total value of all construction / Total valeur de la construction	# residential units in Rockland / # unités résidentielles - Rockland	# residential units in rural / # unités résidentielles - rural	# residential units in villages / # unités résidentielles - villages	Total of all residential units / Total des unités résidentielles	Residential permit fees / Frais de permis résidentiels	# of commercial permits Rockland / # de permis commerciaux Rockland	# of commercial permits Clarence / # de permis commerciaux Clarence	Total number of all commercial permits / Nombre total de permis coommerciaux	Commercial permit fees / Frais pour permis commerce	Total value of commercial construction / Valeur total pour construction commerciale
January	8	4	1	3	$ 1,426,000.00	1	1	1	3	$ 5,596.20	0	0	0	$ -	$ -
February	21	16	4	1	$ 2,042,551.08	8	0	0	8	$ 15,380.40	3	3	6	$ 1,575.90	$ 243,500.00
March	15	8	2	5	$ 2,530,200.00	10	0	2	12	$ 20,512.60	1	0	1	$ 459.00	$ 175,000.00
April	32	26	4	2	$ 8,637,493.73	15	0	0	15	$ 27,782.30	4	-	4	$ 33,340.20	$ 6,095,000.00
May	47	25	9	13	$ 6,032,818.26	25	1	1	27	$ 45,527.90	1	0	1	$ 459.00	$ 7,500.00
June	71	40	17	14	$ 9,512,966.78	25	3	3	31	$ 56,857.60	2	0	2	$ 918.00	$ 370,000.00
July	50	25	13	12	$ 7,375,296.37	24	1	4	29	$ 38,690.90	2	1	3	$ 1,683.93	$ 178,000.00
August	30	16	7	7	$ 3,534,768.05	8	1	1	10	$ 24,096.86	1	-	1	$ 1,426.20	$ 100,000.00
September	28	13	2	13	$ 1,440,203.45	3	1	0	4	$ 8,147.20	-	-	-	-	-
October	38	14	13	11	$ 9,198,577.00	22	0	6	28	$ 44,680.95	0	2	1	$ 459.00	$ 33,060.00
November	32	12	19	1	$ 8,936,492.73	5	3	0	8	$ 29,669.79	0	0	0	$ -	$ -
December	10	7	0	3	$ 1,089,857.13	4	0	0	4	$ 8,966.00	0	0	0	$ -	$ -
Total	382	206	91	85	$ 61,757,224.58	150	11	18	179	$ 325,908.70	14	6	19	$ 40,321.23	$ 7,202,060.00
COMPARAISON WITH 2017															
Dec-17	13	6	1	6	$ 2,057,110.42	5	-	1	9	$ 11,900.40	-	-	-	-	-
Jan-Dec 2017	429	220	95	114	$ 62,004,262.57	170	20	24	214	$ 409,688.45	13	3	16	$ 14,588.00	$ 1,590,200.00

24 decembre 2018

I

REPORT N° PRO2019-004

Date	21/01/2019
Submitted by	Brian Wilson
Subject	Protective Services Monthly Statistics (Nov 2018)
File N°	Click here to enter text.

1) **NATURE/GOAL :**
To advise council on the activities performed by the Protective Services Department.

2) **DIRECTIVE/PREVIOUS POLICY :**
None

3) **DEPARTMENT'S RECOMMENDATION :**
THAT Report No. PRO2019-004 in regards to monthly statistics, be received as information.

QUE le rapport No. PRO2019-004 au sujet des statistiques mensuel, soit reçu à titre d'information.

4) **MONTHLY STATISTICS :**
For the month of November 2018, the Protective Services Department did perform the following:

Fire Department

Incidents:

Call Type	# of Calls (Nov)	YTD
Fire – Residential	1	15
Fire – Commercial		2
Fire – Outdoor		11
Fire – Chimney		1
Fire – Vehicle		7
Fire – Outbuilding		1
Fire – Other (e.g. steam)		2
Burning Complaint		16
Fire Alarms (Cooking)	1	11
Fire Alarms (Malicious)		5
Fire Alarms (Accidental)	3	28
Fire Alarms (Faulty Eq.)	5	35
Fire Alarms (Other)		3
CO Alarm (CO found)	1	7
CO Alarm (No CO found)	2	23

MVC – extrication	1	5
MVC – no extrication	9	52
Medical – VSA	2	25
Medical - Unconscious	1	18
Medical – Other	6	45
Cancelled On Route		5
Other	5	58
Mutual Aid	1	1
TOTAL	**38**	**376**

Fire department response times are detailed in the attached report, and are summarized below:

November – Weekday Incidents			
District	# of P1 Calls	Avg. First Arriving Unit	# of P2 Calls
1A Bourget Rural	2	10:20 mins	
1B Bourget Urban			
1C Bourget Rural			
2A Clarence-Creek Rural			1
2B Clarence-Creek Urban			
2C Clarence-Creek Rural			
3A Rockland Rural	2	10:06 mins	
3B Rockland Urban	6	6:16 mins	
(P1 = priority one, lights & sirens / P2 = priority two, no lights/sirens)			

November – Evening/Weekend/Holiday Incidents			
District	# of P1 Calls	Avg. First Arriving Unit	# of P2 Calls
1A Bourget Rural			
1B Bourget Urban	1	9:00 mins	1
1C Bourget Rural			
2A Clarence-Creek Rural	2	7:25 mins	
2B Clarence-Creek Urban	1	5:52 mins	
2C Clarence-Creek Rural	1	6:36 mins	
3A Rockland Rural	2	10:44 mins	
3B Rockland Urban	11	8:24 mins	7
(P1 = priority one, lights & sirens / P2 = priority two, no lights/sirens)			

Prevention / Public Education:

- The Division Chief completed the Incident Safety Officer course.

	Nov	YTD
Fire Inspections Completed	10	122
Follow-up Inspections	5	45
Fire Drills in Vulnerable Occ.	4	6
Fire Safety Plan Reviews		2
School Fire Drills Attended	1	7
Tickets Issued		6
Public Education Events	1	33
Permanent Fire Permit Insp.		25

Training:

	Nov	YTD
Training Courses Offered	9	68
Training Hours Worked (incl. prep)	678	6626

- The following topics were covered during training in November:
    - Fire Behaviour (Theory)
    - Fire Behaviour (Practical)
    - Health & Safety Awareness
    - Supervisor Health & Safety
    - First Responder (Medical)
    - Fire Officer 1 Instructor
    - Incident Safety Officer
    - Driver Training/Testing
    - Swim Testing

Meetings (evening meetings / committee meetings):

	YTD (Hours)
County Fire Chiefs Meetings	11
Regional Training Centre	10
CRFD Executive Meetings	19
Operational Guideline Committee	3
Training Committee	5
Station Committee	6
Personal Protective Equipment Committee	2
Labour Relations Committee (CRPFFA)	1
CEMC Meeting	2.5
Fire Departments Instructor Conference	16
Cdn. Association of Fire Chiefs Conf.	24
Ontario Association of Fire Chiefs Conf.	24

OAFC Zone Meeting	8
Disaster and Emergency Mgmt. Conf.	12
2018 Mutual Aid Assoc. Gala Meeting	3
Meetings with Staff re: Concerns	3
Meeting with Health Canada (EM)	2
Meetings with UCPR Paramedics	2
CPAC Meeting	1.5
Emergency Management Planning	6
Emergency Management Exercises	14
Ottawa Fire Dispatch Meeting	1

Municipal Enforcement

	November	YTD
Officers hours worked	760	8446.5
OT hours worked (1.5)	3	281.5
OT hours for On Call (1.0)	0	125
Hours on snow enforcement	16	38.5
OT hours on snow enforcement	0	32.5
Hours on Taxi Administration	1	154
Hours on Civic Addressing	3	381
# of parking tickets issued	48	306
# of hours on Business Licensing	5	43
# of parking warnings issued	201	659
# of Part I tickets issued	6	47
# of Part III summons issued	0	2
# of dogs caught at large	9	162
# of complaints handled	369	2430

November 2018

#	Incident Date	Incident Type	District	Apparatus		Staffing	PRIORITY 1/2	Dispatch Time	Responding Time	Arrival Time	Total Response Time	Overall Response Time
Bourget Rural												
18-368	November 16, 2018	Vehicle Collision - Traffic Control	1A (Bourget Rural)	Primary	Pumper 1 (Bourget)	2 FF (Vol)	1	10:26:20 AM	10:28:10 AM	10:37:34 AM	0:11:14	0:11:14
				First Arriving								
18-372	November 22, 2018	Medical - Unconscious	1A (Bourget Rural)	Primary	Squad 1 (Bourget)	1 FF (Vol)		2:23:00 PM	2:28:51 PM	2:34:02 PM	0:11:02	0:09:26
				First Arriving	Car 2 (Deputy)	1 FF (FT)	1		2:24:46 PM	2:32:26 PM	0:09:26	
19:16:02												
18-369	November 16, 2018	Vehicle Collision - No Action	1B (Bourget Village)	Primary	Pumper 1 (Bourget)	3 FF (Vol)	1	7:13:53 PM	7:16:02 PM	7:22:53 PM	0:09:00	0:09:00
				First Arriving								
18-379	November 26, 2018	Carbon Monoxide - Actual	1B (Bourget Village)	Primary	Pumper 1 (Bourget)	4 FF (Vol)	2	4:45:40 AM	5:04:28 AM	5:06:32 AM	0:20:52	0:20:52
				First Arriving								
Bourget -Rural												
Clarence-Creek Rural												
18-352	November 5, 2018	Vehicle Collision - Traffic Control	2A (Clarence Rural)	Primary	Pumper 2 (Clarence)	5 FF (Vol)	1	10:28:58 PM	10:34:24 PM	10:36:19 PM	0:07:21	0:07:21
				First Arriving								
18-374	November 22, 2018	Vehicle Collision - Extrication	2A (Clarence Rural)	Primary	Pumper 2 (Clarence)	3 FF (Vol)	1	6:36:19 PM	6:42:03 PM	6:43:47 PM	0:07:28	0:07:28
				First Arriving								
18-382	November 28, 2018	Other	2A (Clarence Rural)	Primary	Pumper 2 (Clarence)	3 FF (Vol)	2	8:00:21 AM	8:00:21 AM	8:10:33 AM	0:10:12	0:10:12
				First Arriving								
Clarence-Creek Vilage												
18-360	November 10, 2018	Vehicle Collision - No Action	2C (Clarence Rural)	Primary	Pumper 2 (Clarence)	6 FF (Vol)	1	7:02:27 PM	7:08:18 PM	7:08:19 PM	0:05:52	0:05:52
				First Arriving								
Clarence-Creek Rural												
18-355	November 7, 2018	Vehicle Collision - Traffic Control	2C (Clarence Rural)	Primary	Pumper 2 (Clarence)	2 FF (Vol)	1	8:46:53 PM	8:48:55 PM	8:53:29 PM	0:06:36	0:06:36
				First Arriving								
Rockland Rural												
18-356	November 8, 2018	Alarms - Malfunction	3A (Rockland Rural)	Primary	Pumper 3 (Rockland)	5 FF (Vol)	1	12:20:49 AM	12:27:56 AM	12:31:54 AM	0:11:05	0:11:05
				First Arriving								
18-366	November 16, 2018	Vehicle Collision - No Action	3A (Rockland Rural)	Primary	Squad 3 (Rockland)	2 FF (FT)	1	10:17:22 AM	10:19:32 AM	cancelled	cancelled	cancelled
				First Arriving								
18-383	November 22, 2018	Vehicle Collision - Medical	3A (Rockland Rural)	Primary	Pumper 3 (Rockland)	3 FF (Vol)		3:32:30 PM	3:42:57 PM	3:45:07 PM	0:12:37	0:10:06
				First Arriving	Car 2 (Deputy)	1 FF (FT)	1		3:33:17 PM	3:42:36 PM	0:10:06	
18-384	November 30, 2018	Medical - Other	3A (Rockland Rural)	Primary	Squad 3 (Rockland)	4 FF (Vol)	1	5:51:59 PM	5:57:53 PM	6:02:21 PM	0:10:22	0:10:22
				First Arriving								
Rockland Urban												
18-347	November 1, 2018	Alarms - Cooking Incident	3B (Rockland Urban)	Primary	Pumper 3 (Rockland)	4 FF (Vol)	1	4:53:52 PM	5:03:28 PM	5:03:34 PM	0:09:42	0:09:42
				First Arriving								
18-348	November 1, 2018	Alarms - Accidental	3B (Rockland Urban)	Primary	Pumper 3 (Rockland)	4 FF (Vol)	2	8:46:57 PM	8:54:26 PM	8:58:59 PM	0:12:02	0:12:02
				First Arriving								
18-349	November 2, 2018	Carbon Monoxide - False	3B (Rockland Urban)	Primary	Pumper 3 (Rockland)	5 FF (Vol)	2	8:25:36 PM	8:31:54 PM	8:36:00 PM	0:10:24	0:10:24
				First Arriving								
18-350	November 2, 2018	Other	3B (Rockland Urban)	Primary	Pumper 2 (Clarence)	5 FF (Vol)		4:11:48 PM	4:28:09 PM	4:38:50 PM	0:27:02	0:24:40
				First Arriving	Car 3 (Prevention)	1 FF (FT)	2		4:26:26 PM	4:36:28 PM	0:24:40	
18-353	November 5, 2018	Medical - Other	3B (Rockland Urban)	Primary	Squad 3 (Rockland)	4 FF (Vol)	1	10:39:25 PM	10:40:22 PM	10:43:07 PM	0:03:42	0:03:42
				First Arriving								
18-354	November 6, 2018	Medical - VSA	3B (Rockland Urban)	Primary	Squad 3 (Rockland)	2 FF (FT)	1	8:32:22 AM	8:33:54 AM	8:35:13 AM	0:02:51	0:02:51
				First Arriving								
18-357	November 8, 2018	Medical - Lift Assist	3B (Rockland Urban)	Primary	Squad 3 (Rockland)	4 FF (Vol)	1	5:04:07 AM	5:11:55 AM	5:13:49 AM	0:09:42	0:09:42
				First Arriving								
18-358	November 8, 2018	Alarms - Accidental	3B (Rockland Urban)	Primary	Pumper 3 (Rockland)	4 FF (Vol)	1	6:06:33 PM	6:13:17 PM	6:14:44 PM	0:08:11	0:08:11

18-358	November 8, 2018	Alarms - Accidental	3B (Rockland Urban)	First Arriving				6:00:33 PM				0:08:11
18-359	November 9, 2018	Vehicle Collision - No Action	3B (Rockland Urban)	Primary	Pumper 3 (Rockland)	2 FF (FT)	1	2:12:45 PM	2:12:52 PM	2:18:31 PM	0:05:46	0:05:46
				First Arriving								
18-361	November 11, 2018	Medical - Other	3B (Rockland Urban)	Primary	Squad 3 (Rockland)	3 FF (Vol)	1	11:30:00 AM	11:30:00 AM	11:30:00 AM	0:00:00	0:00:00
				First Arriving								
18-362	November 11, 2018	Fire - Residence	3B (Rockland Urban)	Primary	Pumper 3 (Rockland)	6 FF (Vol)	1	12:38:50	12:44:42 PM	12:47:38 PM	0:08:48	0:08:48
				First Arriving								
18-363	November 11, 2018	Medical - Other	3B (Rockland Urban)	Primary	Squad 3 (Rockland)		1	6:10:54 PM	6:11:08 PM	6:14:02 PM	0:03:08	0:03:08
				First Arriving								
18-364	November 15, 2018	Alarms - Accidental	3B (Rockland Urban)	Primary	Pumper 3 (Rockland)	2 FF (Vol)		7:31:25 AM	7:41:24 AM	7:42:16 AM	0:10:51	0:05:44
				First Arriving	Car 1 (Chief)	1 FF (FT)	1		7:31:33 AM	7:37:09 AM	0:05:44	
18-365	November 15, 2018	Other	3B (Rockland Urban)	Primary	Pumper 3 (Rockland)	6 FF (Vol)	2	11:33:39 PM	11:41:59 PM	11:45:53 PM	0:12:14	0:12:14
				First Arriving								
18-367	November 16, 2018	Medical - VSA	3B (Rockland Urban)	Primary	Squad 3 (Rockland)	2 FF (FT)	1	9:50:48	9:53:18 AM	9:55:27 AM	0:04:39	0:04:39
				First Arriving								
18-370	November 19, 2018	Medical - Other	3B (Rockland Urban)	Primary	Squad 3 (Rockland)	Other	1	6:57:24 PM	cancelled	cancelled	cancelled	cancelled
				First Arriving								
18-371	November 21, 2018	Other	3B (Rockland Urban)	Primary	Pumper 3 (Rockland)	1 FF (FT)	1	2:34:32 PM	2:36:12 PM	2:43:06 PM	0:08:34	0:08:34
				First Arriving								
18-372	November 22, 2018	Vehicle Collision - No Action	3B (Rockland Urban)	Primary	Pumper 3 (Rockland)	1 FF (FT)	1	8:34:49 AM	8:35:06 AM	8:39:54 AM	0:05:05	0:05:05
				First Arriving	Car 3 (Prevention)	1 FF (FT)						
18-375	November 23, 2018	Alarms - Malfunction	3B (Rockland Urban)	Primary	Pumper 3 (Rockland)	1 FF (Vol)	1	2:58:20 PM	3:10:57 PM	3:15:36 PM	0:17:16	0:10:41
				First Arriving	Car 3 (Prevention)	1 FF (FT)	1		2:59:52 PM	3:09:01 PM	0:10:41	
18-376	November 24, 2018	Carbon Monoxide - False	3B (Rockland Urban)	Primary	Pumper 3 (Rockland)	4 FF (Vol)	2	11:51:05 AM	12:00:01 PM	12:05:01 PM	0:13:56	0:13:56
				First Arriving								
18-377	November 24, 2018	Alarms - Malfunction	3B (Rockland Urban)	Primary	Pumper 3 (Rockland)	6 FF (Vol)	2	8:35:31 PM	8:43:11 PM	8:45:16 PM	0:09:45	0:09:45
				First Arriving								
18-378	November 25, 2018	Alarms - Malfunction	3B (Rockland Urban)	Primary	Pumper 3 (Rockland)	4 FF (Vol)	1	7:19:37 AM	7:27:21 AM	7:29:38 AM	0:10:01	0:10:01
				First Arriving								
18-380	November 27, 2018	Alarms - Malfunction	3B (Rockland Urban)	Primary	Pumper 3 (Rockland)	5 FF (Vol)	1	3:50:14 AM	4:06:52 AM	4:06:55 AM	0:16:41	0:16:41
				First Arriving								
18-381	November 27, 2018	Other	3B (Rockland Urban)	Primary	Pumper 3 (Rockland)	4 FF (Vol)	2	6:43:54 AM	6:43:57 AM	6:43:57 AM	0:00:03	0:00:03
				First Arriving								
Ottawa												
18-351	November 2, 2018	Vehicle Collision - Medical	Mutual Aid	Primary	Pumper 3 (Rockland)	5 FF (Vol)	1	4:07:42 PM	4:18:26 PM	4:21:57 PM	0:14:15	0:14:15
				First Arriving								

REPORT N° PRO2019-005

Date	21/01/2019
Submitted by	Brian Wilson
Subject	Protective Services Monthly Statistics (Dec 2018)
File N°	Click here to enter text.

1) **NATURE/GOAL :**
To advise council on the activities performed by the Protective Services Department.

2) **DIRECTIVE/PREVIOUS POLICY :**
None

3) **DEPARTMENT'S RECOMMENDATION :**
THAT Report No. PRO2019-005 in regards to monthly statistics, be received as information.

QUE le rapport No. PRO2019-005 au sujet des statistiques mensuel, soit reçu à titre d'information.

4) **MONTHLY STATISTICS :**
For the month of December 2018, the Protective Services Department did perform the following:

Fire Department

Incidents:

Call Type	# of Calls (Dec)	YTD
Fire – Residential		15
Fire – Commercial		2
Fire – Outdoor		11
Fire – Chimney		1
Fire – Vehicle	2	7
Fire – Outbuilding	1	1
Fire – Other (e.g. steam)		2
Burning Complaint		16
Fire Alarms (Cooking)	1	11
Fire Alarms (Malicious)	1	5
Fire Alarms (Accidental)		28
Fire Alarms (Faulty Eq.)	1	35
Fire Alarms (Other)		3
CO Alarm (CO found)	1	7
CO Alarm (No CO found)	2	23

MVC – extrication		5
MVC – no extrication	3	52
Medical – VSA	2	25
Medical - Unconscious	1	18
Medical – Other	2	45
Cancelled On Route		5
Other	2	58
Mutual Aid		1
TOTAL	**19**	**395**

Fire department response times are detailed in the attached report, and are summarized below:

December – Weekday Incidents			
District	# of P1 Calls	Avg. First Arriving Unit	# of P2 Calls
1A Bourget Rural	1	10:31 mins	
1B Bourget Urban			
1C Bourget Rural			
2A Clarence-Creek Rural			
2B Clarence-Creek Urban			
2C Clarence-Creek Rural			
3A Rockland Rural			
3B Rockland Urban	1	16:40 mins	
(P1 = priority one, lights & sirens / P2 = priority two, no lights/sirens)			

December – Evening/Weekend/Holiday Incidents			
District	# of P1 Calls	Avg. First Arriving Unit	# of P2 Calls
1A Bourget Rural	2	13:34 mins	
1B Bourget Urban	1	10:11 mins	
1C Bourget Rural			
2A Clarence-Creek Rural	2	9:36 mins	
2B Clarence-Creek Urban			1
2C Clarence-Creek Rural			
3A Rockland Rural	1	6:55 mins	1
3B Rockland Urban	9	7:38 mins	
(P1 = priority one, lights & sirens / P2 = priority two, no lights/sirens)			

Prevention / Public Education:

	Dec	YTD
Fire Inspections Completed	8	130
Follow-up Inspections	4	49
Fire Drills in Vulnerable Occ.	1	7
Fire Safety Plan Reviews		2
School Fire Drills Attended		7
Tickets Issued		6
Public Education Events		33
Permanent Fire Permit Insp.		25

Training:

	Dec	YTD
Training Courses Offered	9	68
Training Hours Worked (incl. prep)	246	6872

- The following topics were covered during training in November:
  - Peer to Peer PTSD Training
  - First Responder (Medical)
  - Pump Operation Orientation
  - Firefighter Appreciation Night

Meetings (evening meetings / committee meetings):

	YTD (Hours)
County Fire Chiefs Meetings	11
Regional Training Centre	10
CRFD Executive Meetings	23
Operational Guideline Committee	3
Training Committee	5
Station Committee	6
Personal Protective Equipment Committee	2
Labour Relations Committee (CRPFFA)	1
CEMC Meeting	2.5
Fire Departments Instructor Conference	16
Cdn. Association of Fire Chiefs Conf.	24
Ontario Association of Fire Chiefs Conf.	24
OAFC Zone Meeting	8
Disaster and Emergency Mgmt. Conf.	12
2018 Mutual Aid Assoc. Gala Meeting	3
Meetings with Staff re: Concerns	3
Meeting with Health Canada (EM)	2
Meetings with UCPR Paramedics	2

CPAC Meeting	1.5
Emergency Management Planning	6
Emergency Management Exercises	14
Ottawa Fire Dispatch Meeting	3

Municipal Enforcement

	December	YTD
Officers hours worked	676	9122.5
OT hours worked (1.5)	0	281.5
OT hours for On Call (1.0)	0	125
Hours on snow enforcement	18	56.5
OT hours on snow enforcement	16	48.5
Hours on Taxi Administration	8	162
Hours on Civic Addressing	2	383
# of parking tickets issued	70	376
# of hours on Business Licensing	7	50
# of parking warnings issued	23	682
# of Part I tickets issued	6	53
# of Part III summons issued	0	2
# of dogs caught at large	4	166
# of complaints handled	137	2430

December 2018

#	Incident Date	Incident Type	District		Apparatus	Staffing	Apparatus Responding From	Call Location	Distance in KM	PRIORITY 1/2	Dispatch Time	Responding Time	Arrival Time	Total Response Time	Overall Response Time
Bourget Rural															
18-393	December 14, 2018	Vehicle Collision - Traffic Control	1A (Bourget Rural)	Primary	Pumper 1 (Bourget)	5 FF (Vol)	2163,Laval Street, Bourget, Ontario	2530 Russell Road , Bourget, ON	-0.001	1	6:13:35 PM	6:27:11 PM	6:27:11 PM	0:13:36	0:13:36
				First Arriving	Same				-0.001						
18-399	December 24, 2018	Medical - VSA	1A (Bourget Rural)	Primary	Squad 1 (Bourget)	1 FF (Vol)	2163,Laval Street, Bourget, Ontario	3662 Drouin Road, Cheney, ON	-0.001	1	10:16:40 AM	10:24:47 AM	10:29:07 AM	0:12:27	0:10:31
				First Arriving	Car 3 (Prevention)	1 FF (FT)	415 Lemay street, Clarence Creek, ON		-0.001	1		10:17:56 AM	10:27:11 AM	0:10:31	
18-403	December 29, 2018	Fire - Vehicle	1A (Bourget Rural)	Primary	Pumper 1 (Bourget)	5 FF (Vol)	2163,Laval Street, Bourget, Ontario	3435 Drouin Rod, Cheney, ON	-0.001	1	10:42:03 AM	10:48:40 AM	10:55:35 AM	0:13:32	0:13:32
				First Arriving	Same				-0.001						
18-387	December 2, 2018	Alarms - Cooking Incident	1B (Bourget Village)	Primary	Pumper 1 (Bourget)	4 FF (Vol)	2163, Laval Street, Bourget, Ontario	2279 Laval Street, Bourget, ON	-0.001	1	6:13:34 AM	6:22:45 AM	6:23:45 AM	0:10:11	0:10:11
				First Arriving	Same										
Bourget -Rural															
Clarence-Creek Rural															
18-391	December 9, 2018	Medical - Lift Assist	2A (Clarence Rural)	Primary	Squad 2 (Clarence)	2 FF (Vol)	1484 Landry Road, Clarence-Creek, Ontario	488 du Ruisseau, Rockland, ON	-0.001	1	9:23:39 AM	9:34:56 AM	9:35:00 AM	0:11:21	0:11:21
				First Arriving	Same				-0.001						
18-401	December 25, 2018	Fire - Vehicle	2A (Clarence Rural)	Primary	Pumper 2 (Clarence)	3 FF (Vol)	1484 Landry Road, Clarence-Creek, Ontario	1070 Rollin road, St-Pascal Baylon, ON	-0.001	1	4:42:50 PM	4:51:33 PM	4:59:36 PM	0:16:46	0:07:51
				First Arriving	Car 1 (Chief)	1 FF (FT)	323 de l'etang street, Rockland, ON		-0.001	1		4:44:03 PM	4:50:41 PM	0:07:51	
Clarence-Creek Vilage															
18-394	December 19, 2018	Carbon Monoxide - Actual	2C (Clarence Rural)	Primary	Pumper 2 (Clarence)	3 FF (Vol)	1484 Landry Road, Clarence-Creek, Ontario	2186 Landry Road, Clarence Creek, ON	-0.001	2	7:51:31 AM	8:02:10 AM	8:06:16 AM	0:14:45	0:13:48
				First Arriving	Car 2 (Deputy)	1 FF (FT)	415 Lemay street, Clarence Creek, ON			2		7:56:28 AM	8:05:19 AM	0:13:48	
Clarence-Creek Rural															
Rockland Rural															
18-392	December 10, 2018	Carbon Monoxide - False	3A (Rockland Rural)	Primary	Pumper 3 (Rockland)	6 FF (Vol)	1550 Laurier Street, Rockland, ON	181 Oakwood Drive, Rockland, ON	-0.001	2	11:52:42 PM	12:07:48 AM	12:19:48 AM	0:27:06	0:27:06
				First Arriving											
18-400	December 25, 2018	Other	3A (Rockland Rural)	Primary	Other	2 FF (Vol)	1550 Laurier Street, Rockland, ON	3483 Old highway 17, Rockland, On	-0.001	1	2:19:09 PM	2:27:19 PM	2:34:13 PM	0:15:04	0:06:55
				First Arriving	Car 1 (Chief)	1 FF (FT)	323 de l'etang street, Rockland, ON		-0.001	1		14:20:33 PM	2:26:04 PM	0:06:55	
Rockland Urban															
18-385	December 1, 2018	Vehicle Collision - Traffic Control	3B (Rockland Urban)	Primary	Pumper 3 (Rockland)	4 FF (Vol)	1550 Rue Laurier, Rockland, Ontario	2211 Laurier street, Rockland, ON	-0.001	1	12:05:51 PM	12:13:04 PM	12:15:27 PM	0:09:36	0:09:36
				First Arriving	Same										
18-386	December 1, 2018	Vehicle Collision - No Action	3B (Rockland Urban)	Primary	Pumper 3 (Rockland)	5 FF (Vol)	1550 Rue Laurier, Rockland, Ontario	9186 County Road 17, Rockland	-0.001	1	6:11:11 PM	6:16:42 PM	6:21:01 PM	0:09:50	0:09:50
				First Arriving	Same										
18-388	December 2, 2018	Other	3B (Rockland Urban)	Primary	Pumper 3 (Rockland)	6 FF (Vol)	1550 Rue Laurier, Rockland, Ontario	880 Notre Dame Street, Rockland, On	-0.001	1	12:24:07 PM	12:25:21 PM	12:26:59 PM	0:02:52	0:02:52
				First Arriving	Same				-0.001						
18-389	December 3, 2018	Alarms - Malicious	3B (Rockland Urban)	Primary	Pumper 3 (Rockland)	2 FF (Vol)	1550 Rue Laurier, Rockland, Ontario	999 Giroux Street, Rockland, ON	-0.001	1	1:58:10 PM	2:05:29 PM	2:14:50 PM		0:16:40
				First Arriving	Car 3 (Prevention)	1 FF (FT)	1550 Rue Laurier, Rockland, Ontario		-0.001			2:00:18 PM	2:07:26 PM	0:09:16	
18-390	December 7, 2018	Medical - Other	3B (Rockland Urban)	Primary	Squad 3 (Rockland)	3 FF (Vol)	1550 Rue Laurier, Rockland, Ontario	2686 Laurier Street, Rockland, ON	-0.001	1	11:19:44 PM	11:25:25 PM	11:26:46 PM	0:07:02	0:07:02
				First Arriving	Same				-0.001						
18-395	December 20, 2018	Alarms - Malfunction	3B (Rockland Urban)	Primary	Pumper 3 (Rockland)	4 FF (Vol)	1550 Rue Laurier, Rockland, Ontario	8710 County raod 17, Rockland, ON	-0.001	1	7:32:26 PM	7:39:29 PM	7:41:53 PM	0:09:27	0:09:27
				First Arriving	Same				-0.001						
18-396	December 21, 2018	Fire - Outbuilding	3B (Rockland Urban)	Primary	Other	4 FF (Vol)	1550 Rue Laurier, Rockland, Ontario	1951 Laurier street, Rockland, ON	-0.001	1	10:16:02 PM	10:27:33 PM	10:28:47 PM	0:12:45	0:05:17
				First Arriving	Car 1 (Chief)	1 FF (FT)	323 de l'etang street, Rockland, ON			1		10:19:39 PM	10:21:19 PM	0:05:17	
18-397	December 23, 2018	Medical - VSA	3B (Rockland Urban)	Primary	Squad 3 (Rockland)	2 FF (FT)	1550 Rue Laurier, Rockland, Ontario	950 Giroux Street, Rockland, ON	-0.001	1	10:00:22 PM	10:07:58 PM	10:12:20 PM	0:11:58	0:11:58
				First Arriving	Same				-0.001						
18-398	December 24, 2018	Medical - Unconscious	3B (Rockland Urban)	Primary	Squad 3 (Rockland)	2 FF (Vol)	1550 Rue Laurier, Rockland, Ontario	2163 Lemay Circle, Rockland, ON	-0.001	1	6:44:05 PM	6:46:01 PM	6:49:45 PM	0:05:40	0:05:40
				First Arriving	Car 1 (Chief)	1 FF (FT)	323 de l'etang street, Rockland, ON		-0.001	1					
18-402	December 26, 2018	Carbon Monoxide - False	3B (Rockland Urban)	Primary	Pumper 3 (Rockland)	5 FF (Vol)	1550 Rue Laurier, Rockland, Ontario	733 Powers Street, Rockland, ON	-0.001	1		7:01:09 AM	7:03:26 AM	0:12:36	0:07:01
				First Arriving	Car 1 (Chief)	1 FF (FT)	323 de l'etang street, Rockland, ON			1	6:50:50	6:54:49 AM	6:57:51 AM	0:07:01	