CORPORATION OF THE CITY OF
CLARENCE-ROCKLAND
REGULAR MEETING

February 4, 2019, 6:30 pm
Council Chambers
415 rue Lemay Street, Clarence Creek, Ont.

Pages

1. **Opening of the meeting**

   The meeting is scheduled to begin at 6:30 pm in order to allow for a closed session.

   The portion of the meeting that is open to the public begins at 7:15 pm.

2. **Prayer** 1

3. **Adoption of the agenda**

4. **Disclosure of pecuniary interests** 3

5. **Closed Meeting**

   5.1 **Adoption of the minutes of January 15, 2019, January 21, 2019 and January 22, 2019**

   5.2 **Human Resources matter - Director of Finance and Economic Development**

   5.3 **Human Resources matter**

   5.4 **CIH proposal - update**

6. **Closed Meeting report**

7. **Announcements**

8. Comment/Question Period

Note: Members of the public may come forward to the podium and after seeking permission from the Presiding Officer, shall state their name and direct their question/comment on any matter which is related to any item included in this agenda to the Presiding Officer.

The maximum time allowed in all circumstances for a question/comment shall be three (3) minutes per person per meeting. There shall be a maximum of 30 minutes dedicated to the question/comment period. Any unasked questions/comments due to the time restriction may be submitted in writing to the Clerk.

At no time shall this question period be taken by members of the audience to make speeches or accusations.

9. Council Members' Items

10. Consent Items

Note: All items listed in this section of the agenda will be subject to approval under one non-debatable, non-amendable motion. Should any member of Council wish to hold a discussion or engage in debate on one of these items, he or she is required to ask for the item to be considered separately before a vote is taken.

10.1 Adoption of the minutes of the following meetings:

a. Budget meeting of January 15, 2019 5

b. Budget meeting of January 16, 2019 21

c. Budget meeting of January 17, 2019 33

d. Regular meeting of January 21, 2019 45

e. Committee of the Whole meeting of January 21, 2019 65

f. Budget meeting of January 22, 2019 73

10.2 Receipt of the minutes of the following meetings:

a. Library Board - December 11, 2018 85

10.3 The following recommendations from Committee of the Whole of January 21, 2019

a. Alterations to balcony located at the Paroisse Très-Sainte-Trinité Presbytery 91

10.4 Resolution to approve the Draft Plan of Subdivision submitted by Bourgon Lavigne Development – Part of Lot 21, Concession 10, Russell Rd 109

10.5 Resolution to recognize the Clarence Creek Optimist Club Family Hockey Tournament as an event of municipal significance 151

11. Committee/Staff Reports

11.1 2019 Budget adoption 153

11.2 User fees By-Law 183

11.3 Leduc Bus Lines

11.4 Adoption of the Ontario Regulation 284/09 Annual Report 247

11.5 Fire Station Contingency Approval 253

12. By-laws

Note: All items listed in this section of the agenda will be subject to approval under one non-debatable, non-amendable motion. Should any member of Council wish to hold a discussion or engage in debate on one of these By-laws, he or she is required to ask for the item to be considered separately before a vote is taken.

12.1 2019-10 - to adopt a Tax Administration Policy 259

12.2 2019-11 - to sign an agreement with MTO with regards to the allocation of the provincial gas tax 281

12.3 2019-12 - to adopt the waste management rates for 2019 287

12.4 2019-13 - to establish new fees for water and sewer 293

12.5 2019-14 - to sign an agreement with Employement and Social Development Canada for the Enabling Accessibility Fund 299

13. Confirmatory By-law 311

14. Adjournment

CORPORATION DE LA CITÉ DE
CLARENCE-ROCKLAND
RÉUNION RÉGULIÈRE

le 4 février 2019, 18 h 30
Council Chambers
415 rue Lemay Street, Clarence Creek, Ont.

Pages

1. **Ouverture de la réunion**

   La réunion débute à 18h30 afin de permettre une session à huis clos.

   La section de la réunion ouverte au public débute à 19h15.

2. **Prière** 1

3. **Adoption de l'ordre du jour**

4. **Déclarations d'intérêts pécuniaires** 3

5. **Réunion à huis clos**

   5.1 **Adoption des procès-verbaux du 15, 21 et 22 janvier 2019**

   5.2 **Dossier des ressources humaines - Directeur des finances et du développement économique**

   5.3 **Dossier des ressources humaines**

   5.4 **Proposition du CIH - mise à jour**

6. **Rapport de la réunion à huis clos**

7. **Annonces**

8. Période de Questions/Commentaires

Note: Les membres du public sont invités à se rendre au podium et après avoir reçu la permission du président de l'assemblée, doivent se nommer et adresser leur question et/ou commentaire sur tout sujet qui est relié à n'importe quel item qui figure à l'ordre du jour au président de réunion.
Le temps maximal accordé pour une question/commentaire dans toutes circonstances est de trois (3) minutes par personne par réunion. Il y aura un maximum de 30 minutes consacrés à la période de questions/ commentaires. Toutes questions et/ou commentaires qui n'ont pas été adressés par faute de temps peuvent être soumis par écrit à la greffière.
En aucun cas, cette période de questions/ commentaires ne peut être utilisée par les membres du public pour faire des discours ou porter des accusations.

9. Items des membres du Conseil

10. Items par consentement

Note : Les items énumérés dans cette section de l'ordre du jour seront sujet à être considéré pour approbation sous une résolution qui n'est pas sujette au débat et non-modifiable. Si un membre du conseil désire engager une discussion ou un débat par rapport à un de ces items, il/elle doit demander que l'item soit considéré séparément avant que le vote ait lieu.

10.1 Adoption des procès-verbaux des réunions suivantes:

a. Réunion budgétaire du 15 janvier 2019 5

b. Réunion budgétaire du 16 janvier 2019 21

c. Réunion budgétaire du 17 janvier 2019 33

d. Réunion régulière du 21 janvier 2019 45

e. Comité plénier du 21 janvier 2019 65

f. Réunion budgétaire du 22 janvier 2019 73

10.2 Réception des procès-verbaux des réunions suivantes:

a. Conseil d'administration de la bibliothèque publique - 11 décembre 2018 85

10.3 Les recommandations suivantes du comité plénier du 21 janvier 2019

a. Modifications au balcon du presbytère de la Paroisse Très-Sainte-Trinité 91

10.4 Résolution pour approuver l'ébauche de plan de lotissement soumis par Développement Bourgon Lavigne – partie du lot 21, concession 10, chemin Russell 109

10.5 Résolution pour reconnaitre le tournoi des familles du Club Optimiste de Clarence Creek comme étant un événement d'envergure municipale 151

11. Rapports des Comités/Services

11.1 Adoption du budget 2019 153

11.2 Règlement sur les frais usagers 183

11.3 Leduc Bus Lines

11.4 Adoption du rapport annuel exigé par le règlement de l'Ontario 284/09 247

11.5 Approbation de la contigence pour les casernes 253

12. Règlements municipaux

Les règlements énumérés dans cette section de l'ordre du jour seront sujet à être considéré pour approbation sous une résolution qui n'est pas sujette au débat et non-modifiable. Si un membre du conseil désire engager une discussion ou un débat par rapport à un de ces règlements, il/elle doit demander que l'item soit considéré séparément avant que le vote ait lieu.

12.1 2019-10 - pour adopter une politique d'administration et collecte des taxes foncières 259

12.2 2019-11 - pour signer une entente avec le MTO concernant l'allocation de la taxe provinciale sur l'essence 281

12.3 2019-12 - pour adopter le taux de déchets 2019 287

12.4 2019-13 - pour établir des nouveaux frais pour l'eau et les égouts 293

12.5 2019-14 - pour signer une entente avec Emploi et Développement Social Canada pour le Fonds pour l'accesibilité 299

13. Règlement de confirmation 311

14. Ajournement

PRIÈRE D'OUVERTURE / OPENING PRAYOR CITÉ DE / CITY OF CLARENCE-ROCKLAND

Notre Père

Les personnes présentes dans cette salle ont des opinions divergentes, des modes d'expressions variés, des façons différentes de vivre leurs émotions et des cheminements divers dans la prise de leurs décisions.

May we combine clarity of mind with kindness of heart. May we be impartial without bending to strong personalities. May we sacrifice self-interest for the good of the whole.

Veuillez éclairer nos discussions et nos décisions. Aidez-nous à accomplir notre travail avec amour et une vision juste de l'avenir pour le plus grand bien de ceux que nous représentons.

May your name be glorified through our efforts.
Amen

Declaration of pecuniary interest
Déclaration d'intérêt pécuniaire

Date of meeting Date de la réunion:	
Item Number Numéro de l'item:	
Subject of the item: Sujet de l'item :	
Name of Council Member Nom du membre du conseil	

I, _____, hereby declare a pecuniary interest in the matter identified above for the following reason :

Je, _____, déclare un intérêt pécuniaire en ce qui concerne l'article ci-haut mentionné, pour la raison suivante :

Name (print)	Signature	Date

This declaration is filed in accordance with the *Municipal Conflict of Interest Act* and will be recorded in the meeting minutes and will be made available in a public registry. / Cette déclaration est soumise sous la *Loi sur les conflits d'intérêt municipaux* et sera enregistrée dans le procès-verbal de la réunion et sera disponible dans un registre public.

Excerpt from the Municipal Conflict of Interest Act, R.S.O. 1990, c. M.50

DUTY OF MEMBER

When present at meeting at which matter considered

5 (1) Where a member, either on his or her own behalf or while acting for, by, with or through another, has any pecuniary interest, direct or indirect, in any matter and is present at a meeting of the council or local board at which the matter is the subject of consideration, the member,

(a) shall, prior to any consideration of the matter at the meeting, disclose the interest and the general nature thereof;

(b) shall not take part in the discussion of, or vote on any question in respect of the matter; and

(c) shall not attempt in any way whether before, during or after the meeting to influence the voting on any such question. R.S.O. 1990, c. M.50, s. 5 (1).

Where member to leave closed meeting

(2) Where the meeting referred to in subsection (1) is not open to the public, in addition to complying with the requirements of that subsection, the member shall forthwith leave the meeting or the part of the meeting during which the matter is under consideration. R.S.O. 1990, c. M.50, s. 5 (2).

Extrait de la Loi sur les conflits d'intérêts municipaux, L.R.O. 1990, chap. M.50

OBLIGATIONS DU MEMBRE

Participation à une réunion où l'affaire est discutée

5 (1) Le membre qui, soit pour son propre compte soit pour le compte d'autrui ou par personne interposée, seul ou avec d'autres, a un intérêt pécuniaire direct ou indirect dans une affaire et participe à une réunion du conseil ou du conseil local où l'affaire est discutée, est tenu aux obligations suivantes :

a) avant toute discussion de l'affaire, déclarer son intérêt et en préciser la nature en termes généraux;

b) ne pas prendre part à la discussion ni voter sur une question relative à l'affaire;

c) ne pas tenter, avant, pendant ni après la réunion, d'influencer de quelque façon le vote sur une question relative à l'affaire. L.R.O. 1990, chap. M.50, par. 5 (1).

Exclusion de la réunion à huis clos

(2) Si la réunion visée au paragraphe (1) se tient à huis clos, outre les obligations que lui impose ce paragraphe, le membre est tenu de quitter immédiatement la réunion ou la partie de la réunion où l'affaire est discutée. L.R.O. 1990, chap. M.50, par. 5 (2).

CORPORATION OF THE

CITY OF CLARENCE-ROCKLAND

BUDGET SPECIAL MEETING MINUTES

January 15, 2019
Council Chambers
415 rue Lemay Street, Clarence Creek, Ont.

PRESENT:	Samuel Cardarelli, Councillor Ward 1
	Mario Zanth, Councillor Ward 2
	Carl Grimard, Councillor Ward 3
	Don Bouchard, Councillor Ward 4
	André J. Lalonde, Councillor Ward 5
	Christian Simard, Councillor Ward 6
	Michel Levert, Councillor Ward 7
	Diane Choinière, Councillor Ward 8
	Monique Ouellet, Clerk
	Maryse St-Pierre, Deputy Clerk
ABSENT:	Guy Desjardins, Mayor

1. Opening of the meeting

Deputy Mayor Zanth calls the meeting to order at 6:05 pm.

2. Adoption of the agenda

RECOMMENDATION COW2019-01
Moved by Carl Grimard
Seconded by Don Bouchard

THAT the agenda be adopted as presented.

CARRIED

3. Disclosure of pecuniary interests (none)

4. Public requests

4.2 Request presented by Andréa Delorme, President of the Chamber of commerce regarding Chamber's Park on March 21, 2018

The Deputy Mayor Zanth explains that this request was submitted to Council in March 2018 and asks that Council keeps in mind as the budget process unfolds.

4.3 Presentation of a request by Mrs. Jocelyne Leroux in regards to the exterior skating rink boards in Bourget

Mrs. Jocelyne Leroux of 108 Lévis, explains that the Bourget rink boards are in really bad condition and asks that Council considers their replacement to PVC in the 2019 Budget. She adds that the school board has given a written consent to use this space for community activities throughout the year.

Further to questions, Mr. Pierre Boucher explains that the Rockland skating rink board upgrades have been prioritized in this year's budget further to the changes that occurred last year with the Hammond skating rink.

Further to questions, Mr. Boucher explains that the project proposed by Mrs. Leroux would cost approximately $40,000, excluding the fees for the asphalt slab.

Further to questions, Mr. Boucher explains that if an installation is being proposed, the school board would have to be involved.

Mrs. Leroux explains that some community partners would like to participate in the cost of this project.

5. Presentation of an overview of the 2019 Preliminary Budget

Mr. Robert Kehoe explains the proposed process for the budget deliberations.

Mr. Frédéric Desnoyers presents the budget overview. He explains that the proposed budget amount represents what is required to re-establish the 2017 service level.

Further to questions, Mr. Desnoyers explains that when a project is debt financed, the impact may not be shown until two years after its approval.

Further to questions, Mr. Desnoyers explains that the proposed waste tonnage fee increase is being recommended in order to reach the market.

4.1 Petition submitted by Richard Gadoua regarding improvements on Brazeau Road on June 18, 2018

Mr. Richard Gadoua, of 1103 Brazeau, reiterates the petition that was presented at the June 18, 2018, Regular meeting regarding improvements to be made to Brazeau Road.

Further to questions, Mr. Julian Lenhart explains that this road has a lot of problems, including drainage issues. He adds that a surface treatment for this road would approximately be a $600,000 expense.

Mr. Pierre Parent, of 1148 Brazeau, explains that ditch works were completed this year but there is still erosion along his driveway.

RECOMMENDATION COW2019-02
Moved by Don Bouchard
Seconded by Diane Choinière

BE IT RESOLVED THAT the special committee of the whole meeting be adjourned in order to discuss the following item, as stipulated in Section 239 of the *Municipal Act, 2001*, as amended:

6.1. CIH proposal

CARRIED

Members of Council move to the conference room adjacent to the Council Chambers at 6:50 p.m. and return to the Council Chambers at 7:34 p.m.

RECOMMENDATION COW2019-03
Moved by Michel Levert
Seconded by Samuel Cardarelli

BE IT RESOLVED THAT the closed meeting be adjourned to resume the special committee of the whole meeting.

CARRIED

Deputy Mayor Zanth informs the members of the public that Council discussed the CIH proposition in closed session.

Mr. Frédéric Desnoyers explains the document entitled “Operating Budget Changes”, which includes changes to the corporate revenues and expenditures, Council and Community Services budgets.

DIRECTIVE: **THAT** the following changes be approved as recommended:

- Reduction of $50,000 from the Corporate Revenues and Expenditures budget to eliminate contingency for Council salaries;

- Addition of $32,329 from the Council budget to add the impact of Council salaries adjustment;
- Reduction of $1,000 from the Community Services budget to balance indirect salaries;
- Addition of $4,000 from the Community Services budget to address hydro fees for the St-Pascal Community Centre;
- Reduction of $3,200 from the Community Services budget to reduce natural gas fees for the St-Pascal Community Centre.

6. Community Services' 2018 Preliminary Budget Presentation

Mr. Pierre Boucher presents the Community Services budget pressures.

Further to questions about the overtime, Mr. Robert Kehoe explains that the employer must respect the collective agreements.

DIRECTIVE: **THAT** the proposed budget in the amount of $8,000 for the Community Relations overtime budget, be rejected.

DIRECTIVE: **THAT** the proposed budget in the amount of $6,000 for the Info-City be approved.

DIRECTIVE: **THAT** the proposed budget in the amount of $2,500 for the Expo Clarence-Rockland, be rejected.

DIRECTIVE: **THAT** the proposed budget in the amount of $400 for the grant to Meals on Wheels, be rejected.

DIRECTIVE: **THAT** the proposed budget in the amount of $8,500 for free public skating during holidays and March Break be approved.

Further to questions, Mr. Pierre Boucher explains that the request for the Halloween Carnival should be considered in the same manner as other similar events. He adds that the contribution is based on the size of the event.

DIRECTIVE: **THAT** the proposed budget in the amount of $3,000 for the City's contribution of the Optimist Club Halloween Carnival be reduced to $1,000.

Further to questions, Mr. Martin Irwin gives clarifications about the Virtual Exhibit.

DIRECTIVE: **THAT** the proposed budget in the amount of $1,800 for the Virtual Exhibit be reduced to $900.

Further to questions, Mr. Pierre Boucher explains that the Cultural and Artistic Activities Financial Assistance Program funds are allocated through an application process.

DIRECTIVE: **THAT** the proposed budget in the amount of $3,000 for the Cultural and Artistic Activities Financial Assistance Program be rejected.

DIRECTIVE: **THAT** the proposed budget in the amount of $2,750 for other remuneration be approved.

DIRECTIVE: **THAT** the proposed budget in the amount of $18,000 for the snow removal be reduced of $9,000.

Further to questions, Mr. Jean-Luc Jubinville confirms that the contract for the Clarence Creek Arena canteen ends on August 2019.

DIRECTIVE: **THAT** the proposed budget reduction in the amount of $3,000 for the canteen revenues be approved.

DIRECTIVE: **THAT** the proposed budget in the amount of $1,300 for free skating be approved.

DIRECTIVE: **THAT** the proposed budget in the amount of $7,500 for grants to organizations be approved.

DIRECTIVE: **THAT** the proposed budget in the amount of $15,000 for mechanical repairs be reduced to $10,000.

DIRECTIVE: **THAT** consideration of the proposed budget in the amount of $200,000 for the Clarence-Rockland Arena Operations be deferred.

DIRECTIVE: **THAT** the proposed budget in the amount of $20,000 for the New Tree Program be approved.

Request from the École secondaire catholique l'Escale regarding ice rental fees for the Clarence Creek Arena:

DIRECTIVE: **THAT** an amount of $150/h be charged for the ice rental at the Clarence Creek Arena for the "sport-études" program at the "école secondaire catholique l'Escale", being the operational costs.

Other comments:

Councillor Don Bouchard suggests that the organization of shows at the Optimist Performance Hall be added in 2019 Budget. He explains that the City needs to grant an amount of $50,000 in order to schedule the artists. He explains that this

project will be self-financed. Mr. Robert Kehoe suggests that the administration prepare a report about this matter for the consideration of Council.

DIRECTIVE : THAT the administration be mandated to prepare a report regarding the organization of shows at the Optimist Performance Hall.

Break from 8:48 pm to 8:56 pm.

Proposed increase in user fees for Community Services:

Mr. Jean-Luc Jubinville gives an overview of the proposed increase to the user fees.

DIRECTIVE: **THAT** the proposed increases in user fees for Community Services be approved.

Daycares:

Further to questions, Mr. Pierre Boucher confirms that the school board uses the money raised from rents to improve the rooms.

Further to questions, Mrs. Morris-Bouchard explains that there are no rental fees for after-school groups in the agreement with the CSDCEO.

DIRECTIVE: **THAT** the proposed budget for the daycare be approved.

Public Transit:

Further to discussions and questions, Mr. Pierre Boucher explains the contract details.

DIRECTIVE: **THAT** the Administration be mandated to prepare a report regarding the public transit for the February 20, 2019, meeting.

Capital Budget:

DIRECTIVE: **THAT** the proposed capital budget in the amount of $25,000 for the fire extinguishing system be approved.

DIRECTIVE: **THAT** the proposed capital budget in the amount of $250,000 for the construction of the Rockland City Hall Parking be reduced to $200,000.

DIRECTIVE: **THAT** the proposed capital budget in the amount of $40,000 for the Rockland City Hall plan and estimate layout of departments project be deferred to 2020 Budget.

DIRECTIVE: **THAT** the proposed capital budget in the amount of $13,000 for the Clarence-Rockland Arena hood fan be rejected.

DIRECTIVE: **THAT** the proposed capital budget in the amount of $35,000 for emergency stairs be approved.

DIRECTIVE: **THAT** the proposed capital budget in the amount of $60,000 for the Clarence Creek Arena Lobby be approved.

DIRECTIVE: THAT the proposed capital budget in the amount of $15,000 for the emergency evacuation plan be approved.

DIRECTIVE: **THAT** the proposed capital budget in the amount of $20,000 for the Hammond Community Centre be approved.

DIRECTIVE: **THAT** the proposed capital budget in the amount of $75,000 for the Community Services garage be reduced to $25,000.

7. Adjournment

The Deputy Mayor adjourns the meeting at 10:31 pm.

_____	_____
Mario Zanth, Deputy Mayor	Maryse St-Pierre, Deputy Clerk

CORPORATION DE LA

CITÉ DE CLARENCE-ROCKLAND

PROCÈS-VERBAL RÉUNION SPÉCIALE BUDGET

le 15 janvier 2019
Salle du Conseil
415 rue Lemay Street, Clarence Creek, Ont.

PRÉSENT: Samuel Cardarelli, conseiller quartier 1
Mario Zanth, conseiller du quartier 2
Carl Grimard, conseiller du quartier 3
Don Bouchard, conseiller quartier 4
André J. Lalonde, conseiller du quartier 5
Christian Simard, conseiller quartier 6
Michel Levert, conseiller du quartier 7
Diane Choinière, conseillère du quartier 8
Monique Ouellet, greffière
Maryse St-Pierre, greffière adjointe

ABSENT: Guy Desjardins, maire

1. Ouverture de la réunion

Le maire suppléant Zanth ouvre la réunion à 18h05.

2. Adoption de l'ordre du jour

RECOMMANDATION COW2019-01
Proposé par Carl Grimard
Appuyé par Don Bouchard

QUE l'ordre du jour soit adopté tel que présenté.

ADOPTÉE

3. Déclarations d'intérêts pécuniaires (aucune)

4. Demandes du public

4.2 Demande présentée par Andréa Delorme, présidente de la Chambre de commerce concernant le Chamber's Park, le 21mars 2018

Le maire suppléant Zanth explique que cette demande a été soumise au conseil en mars 2018 et demande au conseil de conserver cette demande en tête lors des délibérations budgétaires.

4.3 Présentation d'une demande de Mme Jocelyne Leroux au sujet des bandes de patinoires extérieures à Bourget

Mme Jocelyne Leroux, du 108 rue Lévis, explique que les bandes de patinoires à Bourget sont en très mauvais état et demande que le conseil considère de les remplacer par des bandes de PVC dans son budget 2019, afin d'utiliser l'espace à l'année. Elle ajoute que le conseil scolaire a donné son consentement par écrit afin d'utiliser cet espace pour ses activités à l'année.

Suite aux questions, M. Pierre Boucher explique que la mise à jour des bandes de patinoire de Rockland a été mise en priorité dans ce budget suite aux changements effectués l'an passé pour les bandes de patinoire de Hammond.

Suite aux questions, M. Boucher explique que le projet de Mme Leroux est d'environ 40 000$, excluant les frais pour la dalle en asphalte.

Suite aux questions, M. Boucher explique que si une installation de ce type est faite, il est dans l'intérêt du conseil scolaire d'être impliqué.

Mme Leroux explique que certains partenaires de la communauté peuvent participer aux coûts de ce projet.

5. Présentation sommaire du budget préliminaire de 2019

M. Robert Kehoe explique le déroulement proposé pour les délibérations budgétaires de chacun des départements.

M. Frédéric Desnoyers présente l'aperçu du budget. Il explique que le budget présenté représente ce qui est requis pour ramener le niveau de service de 2017.

Suite aux questions, M. Desnoyers explique que lorsqu'un projet est financé par la dette, celui a un impact sur les 2 années suivant son approbation.

Suite aux questions, M. Desnoyers explique que l'augmentation du tonnage des déchets proposé est pour aller en concurrence avec le marché.

4.1 Pétition soumise par Richard Gadoua concernant les améliorations du chemin Brazeau, le 18 juin 2018

M. Richard Gadoua, résidant au 1103 Brazeau, réitère ses propos de la réunion régulière du 18 juin 2018 concernant les améliorations à être apportées sur le chemin Brazeau.

Suite aux questions, M. Julian Lenhart explique que le chemin rencontre beaucoup de problèmes, incluant des problèmes de drainage. Il ajoute qu'une dépense d'environ 600 000$ est requise pour effectuer le traitement de surface sur ce chemin.

M. Pierre Parent, résidant au 1148 Brazeau, explique que les travaux sur les fossés ont été faits cette année et qu'il y a encore de l'érosion devant son entrée.

RECOMMANDATION COW2019-02
Proposé par Don Bouchard
Appuyé par Diane Choinière

QU'IL SOIT RÉSOLU QUE la réunion spéciale du comité plénier soit ajournée afin de tenir une session à huis clos pour discuter des sujets suivants, tel que stipulé à la section 239 de la *Loi sur les municipalités 2001*, tel que modifiée :

6.1. Proposition CIH

ADOPTÉE

Les membres du conseil se retirent dans la salle de conférence adjacente à la salle du conseil à 18h50 et retournent dans la salle du conseil à 19h34.

RECOMMANDATION COW2019-03
Proposé par Michel Levert
Appuyé par Samuel Cardarelli

QU'IL SOIT RÉSOLU QUE la réunion à huis clos soit ajournée afin de retourner en réunion spéciale du comité plénier.

ADOPTÉE

Le maire suppléant Zanth informe les membres du public que le conseil a discuté de du dossier de la proposition du CIH à huis clos.

M. Frédéric Desnoyers explique le document intitulé « Operating Budget Changes », lequel inclut les changements aux revenus et dépenses corporatifs, et aux budgets du conseil et des services communautaires

DIRECTIVE: **QUE** les changements suivants soient approuvés tel que recommandé :

- Réduction de 50 000$ au budget des revenus et dépenses corporatifs pour éliminer la contingence dans les salaires des membres du conseil;

- Ajout de 32 329$ au budget du conseil pour ajouter l'impact de l'ajustement salarial du conseil;
- Réduction de 1 000$ au budget des services communautaires afin de balancer les salaires indirects;
- Ajout de 4 000$ au budget des services communautaires pour adresser les frais d'hydroélectricité au centre communautaire St-Pascal;
- Réduction de 3 200$ au budget des services communautaires pour réduire les frais de gaz naturel pour le centre communautaire St-Pascal.

6. Présentation du budget préliminaire de 2018 des Services communautaires

M. Pierre Boucher présente les pressions budgétaires des services communautaires.

Suite aux questions relativement aux heures supplémentaires, M. Robert Kehoe explique que l'employeur doit respecter les ententes collectives.

DIRECTIVE: **QUE** le budget proposé de 8 000$ pour le temps supplémentaire des relations communautaires soit rejeté.

DIRECTIVE: **QUE** le budget proposé de 6 000$ pour l'Info-Cité soit approuvé.

DIRECTIVE: **QUE** le budget proposé de 2 500$ pour l'Expo Clarence-Rockland soit rejeté.

DIRECTIVE: **QUE** le budget proposé de 400$ pour la subvention de la popote roulante soit rejeté.

DIRECTIVE: **QUE** le budget proposé de8 500$ pour le patin libre durant les fêtes et la semaine de relâche soit approuvé.

Suite aux questions, M. Pierre Boucher explique que la demande pour le Carnaval d'Halloween doit être considérée de la même façon que les autres évènements du genre. Il ajoute que la contribution correspond à l'envergure de l'évènement.

DIRECTIVE: **QUE** le budget proposé de 3 000$ pour le Carnaval d'Halloween du Club Optimiste de Bourget soit réduite à 1 000$.

Suite aux questions, M. Martin Irwin donne des précisions sur l'exposition virtuelle.

DIRECTIVE: **QUE** le budget proposé de 1 800$ pour l'exposition virtuelle soit réduit à 900$.

Suite aux questions, M. Pierre Boucher explique que les fonds du programme d'aide financière aux activités culturelles et artistiques sont attribués suivant un processus de demande.

DIRECTIVE: **QUE** le budget proposé de 3 000$ pour le programme d'aide financière aux activités culturelles et artistiques soit rejeté.

DIRECTIVE: **QUE** le budget proposé de 2 750$ pour les autres rémunérations de soit approuvé.

DIRECTIVE: **QUE** le budget proposé de 18 000$ pour le déneigement soit réduit de 9 000$.

Suite aux questions, M. Jean-Luc Jubinville confirme que le contrat avec la cantine de l'Aréna de Clarence-Creek se termine au mois d'août 2019.

DIRECTIVE: **QUE** la réduction de budget proposé de 3 000$ pour les recettes de la cantine soit approuvé.

DIRECTIVE: **QUE** le budget proposé de 1 300$ pour le patin libre soit approuvé.

DIRECTIVE: **QUE** le budget proposé de 7 500$ pour les subventions aux organisations soit approuvé.

DIRECTIVE: **QUE** le budget proposé de 15 000$ pour les réparations mécaniques soit réduit à 10 000$.

DIRECTIVE: **QUE** la considération du budget proposé de 200 000$ pour les opérations de l'aréna Clarence-Rockland soit différé.

DIRECTIVE: **QUE** le budget proposé de 20 000$ pour le programme de plantation d'arbres soit approuvé.

Demande de l'École secondaire catholique l'Escale relativement aux frais de glace pour l'aréna de Clarence Creek

DIRECTIVE: **QU**'un montant de 150$/h soit facturé pour la location de la glace à l'aréna de Clarence Creek pour le programme sport-études de l'école secondaire catholique l'Escale, le tout représentant les coûts d'opération.

Autre commentaires :

Le conseiller Don Bouchard suggère que l'organisation de spectacles à la salle Optimiste soit ajoutée au budget 2019. Il explique que la Cité a besoin de donner un montant de 50 000$ afin de réserver les artistes. Il explique que ce projet s'autofinancerait. M. Robert Kehoe suggère que l'administration prépare un rapport sur le sujet pour la considération du conseil.

DIRECTIVE: **QUE** l'Administration soit mandatée de préparer un rapport relativement à l'organisation des spectacles à la salle Optimiste.

Pause de 20h48 à 20h56

Augmentation des frais usagers proposée pour les services communautaires:

M. Jean-Luc Jubinville fait un survol des augmentations de frais usagers proposés.

DIRECTIVE: **QUE** les taux proposés de frais usagers pour les services communautaires soit approuvés.

Service des garderies:

Suite aux questions, M. Pierre Boucher explique que les loyers recueillis par le conseil sont consacrés à l'amélioration des locaux.

Suite aux questions, Mme Morris-Bouchard explique qu'il n'y a aucun loyer pour les groupes parascolaires dans l'entente avec le CSDCEO.

DIRECTIVE: **QUE** le budget proposé pour les garderies soit approuvé.

Transport en commun:

Suite aux questions et discussions, M. Pierre Boucher explique les détails du contrat.

DIRECTIVE: **QUE** l'administration soit mandatée de préparer un rapport relativement au service de transport en commun pour la réunion du 20 février 2019.

Budget en capital:

DIRECTIVE: **QUE** le budget en capital proposé de 25 000$ pour le système d'extinction des feux soit approuvé.

DIRECTIVE: **QUE** le budget en capital proposé de250 000$ pour la construction du stationnement de l'hôtel de ville de Rockland soit réduite à 200 000$.

DIRECTIVE: **QUE** le budget en capital proposé de 40 000$ pour le projet de plans et devis d'aménagement des départements soit différé pour le budget 2020.

DIRECTIVE: **QUE** le budget en capital proposé de 13 000$ pour la hotte de l'aréna de Clarence-Rockland soit rejeté.

DIRECTIVE: **QUE** le budget en capital proposé de 35 000$ pour les marches de sortie d'urgence soit approuvé.

DIRECTIVE: **QUE** le budget en capital proposé de 60 000$ pour le lobby de l'aréna de Clarence Creek soit approuvé.

DIRECTIVE: **QUE** le budget en capital proposé de15 000$ pour le plan d'évacuation d'urgence soit approuvé.

DIRECTIVE: **QUE** le budget en capital proposé de 20 000$ pour le centre communautaire de Hammond soit approuvé.

DIRECTIVE: **QUE** l le budget en capital proposé de 75 000$ pour le projet de garage des services communautaires soit réduit à 25 000$.

7. Ajournement

Le maire suppléant lève l'assemblée à 22h31.

_____	_____
Mario Zanth, maire suppléant	Maryse St-Pierre, greffière adjointe

CORPORATION OF THE

CITY OF CLARENCE-ROCKLAND

BUDGET SPECIAL MEETING MINUTES

January 16, 2019
Council Chambers
415 rue Lemay Street, Clarence Creek, Ont.

PRESENT: Guy Desjardins, Mayor
Samuel Cardarelli, Councillor Ward 1
Mario Zanth, Councillor Ward 2
Carl Grimard, Councillor Ward 3
Don Bouchard, Councillor Ward 4
André J. Lalonde, Councillor Ward 5
Christian Simard, Councillor Ward 6
Michel Levert, Councillor Ward 7
Diane Choinière, Councillor Ward 8
Monique Ouellet, Clerk
Maryse St-Pierre, Deputy Clerk

1. Opening of the meeting

Mayor Desjardins calls the meeting to order at 18h.

2. Adoption of the agenda

RECOMMENDATION COW2019-04
Moved by Mario Zanth
Seconded by Michel Levert

THAT the agenda be adopted as presented.

CARRIED

3. Disclosure of pecuniary interests (none)

4. Community Services Capital (continued)

Capital Budget:

Further to questions, Mr. Pierre Boucher explains that there is a possible partnership opportunity with the school board in regard to the use of the Jean-Marc Lalonde Arena.

Further to questions, Mr. Jubinville explains that regardless of the current discussions, some health and safety issues need to be addressed in order to keep the establishment opened to public.

DIRECTIVE: THAT the proposed capital budget in the amount of $3,300,000 for the Jean-Marc Lalonde Arena be reduced to $100,000 in order to address urgent issues and that a report be prepared for Council's consideration further to the discussions with the school board.

DIRECTIVE: THAT the proposed capital budget in the amount of $25,000 for the tables and benches project be reduced to $12,500.

DIRECTIVE: THAT the proposed capital budget in the amount of $15,000 for the Hammond tennis court be approved.

DIRECTIVE: THAT the proposed capital budget in the amount of $132,000 for accessible play structures be approved.

DIRECTIVE: THAT the proposed capital budget in the amount of $100,000 for the Clarence Creek baseball field be approved

DIRECTIVE: THAT the proposed capital budget in the amount of $20,000 for Simon Park accessible paths be approved.

Further to questions, Mr. Jubinville explains that due to changes in the layout, the Morris Village Park project expense could be reduced by 25%. He adds that a sponsorship program may be considered.

Further to questions, Mr. Jubinville confirms that the project could not be completed in phases because it would have an impact in its development.

DIRECTIVE: THAT the proposed capital budget in the amount of $325,000 for the Morris Village Park budget be approved.

DIRECTIVE: THAT the proposed capital budget in the amount of $45,000 for the Richelieu Grande-Rivière Park be approved.

DIRECTIVE: THAT the request for the Bourget exterior skating rinks boards be deferred to the 2020 Budget.

DIRECTIVE: THAT the proposed capital budget in the amount of $60,000 for the Deschamps Park parking be deferred to the 2020 Budget.

DIRECTIVE: THAT the proposed capital budget in the amount of $30,000 for the outdoor playground landscaping project for the St-Patrick Daycare be approved.

DIRECTIVE: THAT the proposed capital budget in the amount of $65,000 for the purchase of a cube van for Community Services be approved.

4.1 Financial support request from the Rockland Marching Band

DIRECTIVE: THAT the $3,000 request for a lift from the Rockland marching band be rejected.

5. Public Library Board's 2019 Preliminary Budget Presentation

Further to discussions the following directive is adopted:

DIRECTIVE: THAT the contribution to the Public Library Board in the amount of $145,325 be reduced to $84,325.

Break from 8:02 pm to 8:13 pm.

6. Protective Services' 2019 Preliminary Budget Presentation

DIRECTIVE: THAT the proposed budget revenue in the amount of $5,000 for rescue - extrication services (account 1-3-2100-0620) be increased by $20,000.

Mr. Brian Wilson explains that he included the necessary budget pressures to increase the number of volunteer firefighters to 80 as per the Fire Master Plan. However, he is willing to remain at 75. He adds that should Council wish to remain at 75, items 5, 11 and 15 in the Major Changes to the Protection Services Department, which corresponds to new firefighters, could be removed.

DIRECTIVE: THAT the proposed budget in the amount of $3,000 for volunteer firefighters uniforms be rejected.

DIRECTIVE: THAT the proposed budget in the amount of $6,000 for volunteer firefighters protective clothing be rejected.

DIRECTIVE: THAT the proposed budget in the amount of $4,000 for volunteer firefighters training materials be rejected.

Further to questions and discussion, Mr. Wilson explains the process for volunteer firefighter’s medical training.

DIRECTIVE: THAT the proposed budget in the amount of $25,000$ for the part-time wages be approved.

DIRECTIVE: THAT the proposed budget in the amount of $15,000 for salaries and benefits be approved.

DIRECTIVE: THAT the proposed budget in the amount of $10,000 for a Medical Director be rejected.

DIRECTIVE: THAT the proposed budget in the amount of $800 for the educational materials be rejected.

DIRECTIVE: THAT the proposed budget in the amount of $300 for training materials be rejected.

DIRECTIVE: THAT the proposed budget in the amount of $25,595 for the fire training - part-time wages be reduced of $9,200.

DIRECTIVE: THAT the proposed budget in the amount of $9,000 for the training and courses be rejected.

DIRECTIVE: THAT the proposed budget in the amount of $5,000 for the addition of two additional radios be rejected.

Proposed increase in user fees for Protective Services:

Further to questions, Mrs. Monique Ouellet explains that parking tickets cannot be increased in the same manner as user fees. She further explains that set fines for parking violations are to be submitted to the Attorney General for approval, and as such this will be done once the parking by-law revision is completed.

DIRECTIVE: THAT the proposed user fees increase for the Protective Services be approved with the following amendments:

- that the proposed fee of $260 for the second false alarm be increased to $500; and

- that the proposed fee of $1,040 for subsequent false alarms be increased to $1,500.

Capital Budget

DIRECTIVE: THAT the proposed capital budget in the amount of $10,000 for the thermal imaging camera be rejected.

DIRECTIVE: THAT the proposed capital budget in the amount of $30,000 for the rescue air bags, controller and rescue struts be approved.

DIRECTIVE: THAT the proposed capital budget in the amount of $40,000 for the battery operated jaws of life be rejected.

DIRECTIVE: THAT the proposed capital budget in the amount of $10,000 for the body cameras for By-Law be approved.

Further to questions, Mr. Robert Kehoe explains that the City has an asset management policy, which includes a list of all vehicles to be replaced.

DIRECTIVE: THAT the proposed capital budget in the amount of $65,000 for the purchase of a command SUV with up fit be approved.

DIRECTIVE: THAT the proposed capital budget in the amount of $55,000 for the purchase of Enforcement SUV AWD with up fit be approved.

DIRECTIVE: THAT the proposed capital budget in the amount of $60,000 for the purchase of an Enforcement SUV AWD with up fit be rejected.

Further to questions, Mr. Wilson explains that the Pumper/Tanker replacement is presented according to the vehicle replacement plan and insurance. He adds that the issue is that this vehicle does not support its own load.

DIRECTIVE: THAT the proposed capital budget in the amount of $580,000 for the purchase of a Pumper/Tanker be approved.

7. Adjournment

The Mayor adjourns the meeting at 10:30 pm.

_____ _____

Guy Desjardins, Mayor Maryse St-Pierre, Deputy Clerk

CORPORATION DE LA

CITÉ DE CLARENCE-ROCKLAND

PROCÈS-VERBAL RÉUNION SPÉCIALE BUDGET

le 16 janvier 2019
Salle du Conseil
415 rue Lemay Street, Clarence Creek, Ont.

PRÉSENT: Guy Desjardins, maire
Samuel Cardarelli, conseiller quartier 1
Mario Zanth, conseiller du quartier 2
Carl Grimard, conseiller du quartier 3
Don Bouchard, conseiller quartier 4
André J. Lalonde, conseiller du quartier 5
Christian Simard, conseiller quartier 6
Michel Levert, conseiller du quartier 7
Diane Choinière, conseillère du quartier 8
Monique Ouellet, greffière
Maryse St-Pierre, greffière adjointe

1. Ouverture de la réunion

Le maire Desjardins ouvre la réunion à 6:00 pm.

2. Adoption de l'ordre du jour

RECOMMANDATION COW2019-04
Proposé par Mario Zanth
Appuyé par Michel Levert

QUE l'ordre du jour soit adopté tel que présenté.

ADOPTÉE

3. Déclarations d'intérêts pécuniaires (aucune)

4. Services communautaires (continuation)

Budget en capital:

Suite aux questions, M. Pierre Boucher explique qu'il y a une possibilité de partenariat avec le conseil scolaire pour l'utilisation de l'aréna Jean-Marc Lalonde.

Suite aux questions, M. Jubinville explique que hormis les discussions en cours, certaines problématiques quant à la santé et à la sécurité doivent être adressées en vue de maintenir le bâtiment ouvert au public.

DIRECTIVE: QUE le budget proposé de 3 300 000$ pour le projet de l'aréna Jean-Marc Lalonde soit réduit à 100 000$ afin de rectifier les enjeux urgents et qu'un rapport soit préparé pour la considération du conseil suite aux discussions avec le conseil scolaire.

DIRECTIVE: QUE le budget en capital proposé de 25 000$ pour le projet des tables et des bancs soit réduit à 12 500$.

DIRECTIVE: QUE le budget en capital proposé de 15 000$ pour le terrain de tennis de Hammond soit approuvé.

DIRECTIVE: QUE le budget en capital proposé de 132 000$ pour les structures de jeux accessibles soit approuvé.

DIRECTIVE: QUE le budget en capital proposé de 100 000$ pour le terrain de balle à Clarence Creek soit approuvé.

DIRECTIVE: QUE le budget en capital proposé de 20 000$ pour les sentiers accessibles du parc Simon soit approuvé.

Suite aux questions, M. Jubinville explique que le montant du projet du parc du Village Morris a pu être réduit de 25% du à des changements dans le design. Il ajoute qu'un programme de commandite peut être considéré.

Suite aux questions, M. Jubinville confirme que le projet ne peut se faire en phases, car cela pourrait avoir un impact sur le développement du projet.

DIRECTIVE: QUE le budget en capital proposé de 325 000 pour le parc du village Morris soit approuvé.

DIRECTIVE: QUE le budget en capital proposé de 45 000$ pour le parc Richelieu Grande-Rivière soit approuvé.

DIRECTIVE: QUE la demande relativement aux bandes de patinoires extérieures de Bourget soit différée au budget de 2020.

DIRECTIVE: QUE le budget en capital proposé de 60 000$ pour le stationnement du parc Deschamps soit différé au budget 2020.

DIRECTIVE: QUE le budget en capital proposé de 30 000$ pour le projet d'aménagement de l'aire de jeu de la Garderie St-Patrick soit approuvé.

DIRECTIVE: QUE le budget en capital proposé de 65 000$ pour l'achat d'une camionnette pour les loisirs soit approuvé.

4.1 Demande d'aide financière pour la Fanfare de Rockland

DIRECTIVE: QUE la demande de la Fanfare de Rockland de 3 000$ pour un monte-charge soit rejetée.

5. Présentation du budget préliminaire de 2019 du Conseil d'administration de la bibliothèque publique

Suite aux discussions, la directive suivante est adoptée:

DIRECTIVE: QUE la contribution à la bibliothèque publique de 145 325$ pour soit réduite à 84 325$.

Pause à 20h02 à 20h13.

6. Présentation du budget préliminaire de 2019 des Services de la protection

DIRECTIVE: QUE le budget de revenu proposé de 5 000$ pour le service de désincarcération lors de sauvetage (compte 1-3-2100-0620) soit augmenté de 20 000$.

M. Brian Wilson explique qu'il a inclut dans le budget des pressions budgétaires dans le but d'augmenter le nombre de pompiers volontaires à 80, tel que mentionné dans le plan maître des incendies. Cependant, il est d'accord de maintenir le nombre à 75. Il ajoute que si le conseil désire maintenir le nombre à 75, les items des changements majeurs du service de la Protection 5, 11 et 15, correspondant à l'ajout de nouveaux pompiers volontaires, peuvent être retirés.

DIRECTIVE: QUE le budget proposé de 3 000$ pour les uniformes des pompiers volontaires soit rejeté.

DIRECTIVE: QUE le budget proposé de 6 000$ pour les vêtements de protection des pompiers volontaires soit rejeté.

DIRECTIVE: QUE le budget proposé de 4 000$ pour le matériel de formation des pompiers volontaires soit rejeté.

Suite aux questions et discussions, M. Wilson explique le processus de formation médicale des pompiers volontaires.

DIRECTIVE: QUE le budget proposé de 25 000$ pour la rémunération de temps partiel soit approuvé.

DIRECTIVE: QUE le budget proposé de 15 000$ pour les salaires et avantages sociaux soit approuvé.

DIRECTIVE: QUE le budget proposé de 10 000$ pour un directeur médical soit rejeté.

DIRECTIVE: QUE le budget proposé de 800$ pour le matériel éducatif soit rejeté.

DIRECTIVE: QUE le budget proposé de 300$ pour le matériel de formation soit rejeté.

DIRECTIVE: QUE le budget proposé de 25 595$ pour la formation contre les incendies - rémunération de temps partiel soit réduit de 9 200$.

DIRECTIVE: QUE le budget proposé de 9 000$ pour la formation et les cours soit rejeté.

DIRECTIVE: QUE le budget proposé de 5 000$ pour l'ajout de deux radios supplémentaires soit rejeté.

Augmentation proposée des frais usagers pour le service de la Protection:

Suite aux questions, Mme Monique Ouellet explique que les contraventions de stationnement ne peuvent être augmentées de la même façon que les frais usagers. Elle explique également que les amendes fixes pour les infractions au stationnement doivent être soumises au Procureur Général pour approbation et que cela sera mis en œuvre lorsque la révision du règlement sur le stationnement sera complétée.

DIRECTIVE: QUE l'augmentation des redevances d'usagers proposée pour le service de la Protection soient approuvés, hormis les modifications suivantes:

- que le frais proposé de 260$ pour les frais de deuxième fausse alarme soit augmenté à 500$; et

- que le frais proposé de 1 040$ pour les frais de fausses alarmes subséquentes soit augmenté à 1 500$.

Budget en capital :

DIRECTIVE: QUE le budget en capital proposé de 10 000$ pour la caméra à imagerie thermique soit rejeté.

DIRECTIVE: QUE le budget en capital proposé de 30 000$ pour les coussins gonflables de sauvetage, contrôleur et jambes de sauvetage soit approuvé.

DIRECTIVE: QUE le budget en capital proposé de 40 000$ pour les pinces de désincarcération à batterie soit rejeté.

DIRECTIVE: QUE le budget en capital proposé de 10 000$ pour les caméras de corps pour la règlementation soit approuvé.

Suite aux questions, M. Robert Kehoe explique que la Cité a en place des politiques de gestion des actifs, lesquelles contiennent une liste complète des véhicules à remplacer.

DIRECTIVE: QUE le budget en capital proposé de 65 000$ pour l'achat d'un véhicule de commandement VUS avec transformation soit approuvé.

DIRECTIVE: QUE le budget en capital proposé de 55 000$ pour l'achat d'un véhicule pour la règlementation - quatre roues motrices avec transformation soit approuvé.

DIRECTIVE: QUE le budget en capital proposé de 60 000$ pour l'achat d'un VUS pour la règlementation - quatre roues motrices avec transformation soit rejeté.

Suite aux questions, M. Wilson explique que le remplacement du camion-pompe/citerne correspond au plan de remplacement des véhicules et des assurances. Il ajoute que l'enjeu est que le camion-pompe/citerne ne supporte plus sa charge.

DIRECTIVE: QUE le budget en capital proposé de 580 000$ pour l'achat d'un camion-pompe/citerne soit approuvé.

7. Ajournement

Le maire lève l'assemblée à 22h30.

_____ _____

Guy Desjardins, maire Maryse St-Pierre, greffière adjointe

CORPORATION OF THE

CITY OF CLARENCE-ROCKLAND

BUDGET SPECIAL MEETING MINUTES

January 17, 2019
Council Chambers
415 rue Lemay Street, Clarence Creek, Ont.

PRESENT: Guy Desjardins, Mayor
Samuel Cardarelli, Councillor Ward 1
Mario Zanth, Councillor Ward 2
Carl Grimard, Councillor Ward 3
Don Bouchard, Councillor Ward 4
André J. Lalonde, Councillor Ward 5
Christian Simard, Councillor Ward 6
Michel Levert, Councillor Ward 7
Diane Choinière, Councillor Ward 8
Monique Ouellet, Clerk
Maryse St-Pierre, Deputy Clerk

1. Opening of the meeting

Mayor Desjardins calls the meeting to order at 6:01 pm.

2. Adoption of the agenda

RECOMMENDATION COW2019-05
Moved by Carl Grimard
Seconded by Mario Zanth

THAT the agenda be adopted as presented.

CARRIED

3. Disclosure of pecuniary interests (none)

Mr. Frédéric Desnoyers explains that the UCPR radio project allows a budget pressure reduction of $100,000 which changes the tax increase to 8.76%.

4. Infrastructure and Planning Services' 2019 Preliminary Budget Presentation

Mr. Julian Lenhart presents the Department of Infrastructure and Planning budget overview.

Major Changes:

Further to questions, Mr. Julian Lenhart explains that the number of projects to be managed do not correspond to the available staff.

DIRECTIVE: THAT the proposed budget in the amount of $25,000 for the hot mix contracts be reduced to $12,500.

DIRECTIVE: THAT the proposed budget in the amount of $15,000 for the sidewalks repairs be approved.

DIRECTIVE: THAT the proposed budget in the amount of $22,000 for the sidewalks repairs be approved.

DIRECTIVE: THAT the proposed budget in the amount of $9,000 for the signs replacement be rejected.

DIRECTIVE: THAT the proposed budget in the amount of $5,000 for the dust layer be rejected.

DIRECTIVE: THAT the proposed budget in the amount of $50,000 for the snow contribution reserve be rejected.

Planning:

DIRECTIVE: THAT the proposed budget in the amount of $400 for publication be rejected.

DIRECTIVE: THAT the proposed budget in the amount of $2,000 for the Environmental Committee be rejected.

DIRECTIVE: THAT the proposed budget in the amount of $33,000 for the new junior project coordinator be rejected.

Construction - no discussions

Water, Sewer & Waste:

Mr. Lenhart explains that the proposed increase for waste tonnage is $135 to reflect the costs.

Further to questions, Mr. Lenhart explains the details of the waste collection contract, in regard to the commercial waste bins.

DIRECTIVE: THAT the proposed budget in the amount of $1,050 for the commercial waste bins be increased to $2,000.

DIRECTIVE: THAT the proposed budget in the amount of $420 for the commercial waste bags be $400.

Further to questions, Mr. Lenhart explains that the addition of an employee for the replacement and maintenance of water meters will allow meeting the emergency delays of 24 hours.

Further to questions, Mr. Frédéric Desnoyers explains that the annual increases in waste fees are in order to meet the costs and address potential replacements.

Proposed increase in user fees for Infrastructure and Planning

DIRECTIVE: THAT the proposed user fee increases for the Department of Infrastructure and Planning be approved.

Break from 7:44 pm to 7:53 pm.

Capital Budget:

Further to questions, Mr. Lenhart explains that the City's sidewalk plow has reached its capacity. He adds that if this piece of equipment breaks, this type of equipment is not readily available to rent.

DIRECTIVE: THAT the proposed capital budget in the amount of $155,000 for the purchase of a sidewalk plow be approved.

Further to questions, Mr. Lenhart explains that the budget for the snow disposal site is in order to proceed with the purchase of land and then convert it to receive snow. He adds that the specific property has yet to be identified.

DIRECTIVE: THAT the proposed capital budget in the amount of $1,145,000 for the site development for snow disposal Rockland site be approved.

Further to discussions, Mr. Lenhart explains that Brazeau Road does not meet the 10-year plan requirements. He clarifies that this road could be a local improvement project.

DIRECTIVE: THAT the Administration be mandated to prepare a report regarding the Brazeau Road condition and that a communication be made to its residents further to that report.

DIRECTIVE: THAT the proposed capital budget in the amount of $525,000 for paving on Lacroix Road be approved.

DIRECTIVE: THAT the proposed capital budget in the amount of $490,000 for paving on Vinette Road be approved.

DIRECTIVE: THAT the proposed capital budget in the amount of $40,000 for geotechnical investigation for Du Lac and Lavigne roads be approved.

DIRECTIVE: THAT the proposed capital budget in the amount of $175,000 for scratch coat on Charron, Marion, Blue Jay and Cardinal roads be used to complete scratch coat on the Old Highway 17 and the small section on Bouvier Road.

DIRECTIVE: THAT the proposed capital budget in the amount of $200,000 for the culvert replacement program of St-Félix, Lacasse, Bouvier and Butler be approved

DIRECTIVE: THAT the proposed capital budget in the amount of $70,000 for the closure of Clarence-Rockland Arena entrance be deferred.

DIRECTIVE: THAT the proposed capital budget in the amount of $75,000 for Baseline Road - ditch work on private property be rejected.

DIRECTIVE: THAT the proposed capital budget in the amount of $250,000 for drainage improvements on Clark Road be rejected.

DIRECTIVE: THAT the proposed capital budget in the amount of $150,000 for the replacement of Boundary/Canaan Road be approved.

DIRECTIVE: THAT the proposed capital budget in the amount of $87,000 for Rodrigue storm be approved.

DIRECTIVE: THAT the proposed capital budget in the amount of $15,200 for McTeer Road paving be approved.

DIRECTIVE: THAT the proposed capital budget in the amount of $45,000 for the purchase of a 3/4-Ton Truck be approved.

DIRECTIVE: THAT the proposed capital budget in the amount of $25,000 for the addition of a used service truck for mechanics be approved.

DIRECTIVE: THAT the proposed capital budget in the amount of $160,000 for the backhoe replacement be approved and that a report be prepared for Council's consideration in regard to rental costs.

DIRECTIVE: THAT the proposed capital budget in the amount of $200,000 for the sanitary sewer master plan upgrade be approved.

DIRECTIVE: THAT the proposed capital budget in the amount of $89,000 for the Albert Street sanitary sewer replacement be approved.

DIRECTIVE: THAT the proposed capital budget in the amount of $75,000 for the replacement of mixing pump impellers be approved.

DIRECTIVE: THAT the proposed capital budget in the amount of $200,000 for PRV waterlooping Clarence Creek be approved.

DIRECTIVE: THAT the proposed capital budget in the amount of $109,000 for Wallace Street design be approved.

DIRECTIVE: THAT the proposed capital budget in the amount of $35,000 for landfill facility fencing be approved.

DIRECTIVE: THAT the Administration be mandated to review the proposed budget in order to reduce the tax increase to approximately 3%.

8. Adjournment

The Mayor adjourns the meeting at 10:02 pm.

_____ _____

Guy Desjardins, Mayor Maryse St-Pierre, Deputy Clerk

CORPORATION DE LA

CITÉ DE CLARENCE-ROCKLAND

PROCÈS-VERBAL RÉUNION SPÉCIALE BUDGET

le 17 janvier 2019
Salle du Conseil
415 rue Lemay Street, Clarence Creek, Ont.

PRESENT: Guy Desjardins, maire
Samuel Cardarelli, conseiller quartier 1
Mario Zanth, conseiller du quartier 2
Carl Grimard, conseiller du quartier 3
Don Bouchard, conseiller quartier 4
André J. Lalonde, conseiller du quartier 5
Christian Simard, conseiller quartier 6
Michel Levert, conseiller du quartier 7
Diane Choinière, conseillère du quartier 8
Monique Ouellet, greffière
Maryse St-Pierre, greffière adjointe

1. Ouverture de la réunion

Le maire Desjardins ouvre la réunion à 18h01.

2. Adoption de l'ordre du jour

RECOMMANDATION COW2019-05
Proposé par Carl Grimard
Appuyé par Mario Zanth

QUE l'ordre du jour soit adopté tel que présenté.

ADOPTÉE

3. Déclarations d'intérêts pécuniaires (aucune)

M. Frédéric Desnoyers explique que le projet des radios du CUPR permet de retirer une pression budgétaire de 100 000$, ce qui porte l'augmentation du taux de taxe à 8.76%.

4. Présentation du budget préliminaire de 2019 du Service des infrastructures et de l'aménagement

M. Julian Lenhart fait une présentation sommaire du budget du département de l'infrastructure et l'aménagement du territoire.

Changements majeurs

Suite aux questions, M. Lenhart explique que le nombre de projets à être gérés ne correspond pas au personnel en place.

DIRECTIVE: QUE le budget proposé de 25 000$ pour le contrat de mélange à chaud soit réduit de 12 500$.

DIRECTIVE: QUE le budget proposé de 15 000$ pour l'entretien préventif des accotements soit rejeté.

DIRECTIVE: QUE le budget proposé de 15 000$ pour la réparation des trottoirs soit approuvé.

DIRECTIVE: QUE le budget proposé de 22 000$ pour la réparation des trottoirs soit approuvé.

DIRECTIVE: QUE le budget proposé de 9 000$ pour le remplacement des enseignes soit rejeté.

DIRECTIVE: QUE le budget proposé de 5 000$ pour l'épandage de poussière soit rejeté.

DIRECTIVE: QUE le budget proposé de 50 000$ pour la contribution de la réserve du déneigement soit rejeté.

Aménagement du territoire:

DIRECTIVE: QUE le budget proposé de 400$ pour la publication soit rejeté.

DIRECTIVE: QUE le budget proposé de 2 000$ pour le comité de l'environnement soit rejeté.

DIRECTIVE: QUE le budget proposé de 33 000$ pour le nouveau coordonnateur de projet junior soit rejeté.

Construction: aucune discussion.

Eau, égouts et déchets:

M. Lenhart explique que l'augmentation proposée pour le tonnage des déchets est de 135$ afin de refléter les couts.

Suite aux questions, M. Lenhart explique les détails du contrat de collecte des déchets, notamment pour les bacs de déchets commerciaux.

DIRECTIVE: QUE le budget proposé de 1 050$ pour les bacs de déchets commerciaux soit augmenté à 2 000$.

DIRECTIVE: QUE le budget proposé de 420$ pour les sacs de poubelles commerciaux soit à 400$.

Suite aux questions, M. Lenhart explique que l'ajout d'un employé pour le remplacement et la réparation des compteurs d'eau permettrait de rencontrer les délais de 24 heures pour les urgences.

Suite aux questions, M. Frédéric Desnoyers explique que les augmentations annuelles des frais pour les déchets ont pour but de rejoindre les couts et d'adresser les couts éventuels de remplacement.

Augmentation proposée des frais usagers pour l'Infrastructure et l'Aménagement du territoire

DIRECTIVE: QUE l'augmentation des frais usagers proposée pour le département d'Infrastructure et Aménagement du territoire soit approuvée.

Pause de 19h44 à 19h53

Budget en capital:

Suite aux questions, M. Lenhart explique que la déneigeuse à trottoir de la Cité est à la limite de ses capacités. Il ajoute qu'en cas de bris, il n'est pas possible de louer ce type de machine sur-le-champ.

DIRECTIVE: QUE le budget en capital proposé de 155 000$ pour l'achat d'une déneigeuse à trottoir soit approuvé.

Suite aux questions, M. Lenhart explique que le budget pour le dépotoir à neige est en vue de procéder à l'achat du terrain et de le convertir pour recevoir la neige. Il ajoute qu'aucun terrain n'a été sélectionné pour le moment.

DIRECTIVE: QUE le budget en capital proposé de 1 145 000$ pour l'aménagement du site pour dépotoir à neige Rockland soit approuvé.

Suite aux discussions, M. Lenhart explique que le chemin Brazeau ne rencontre pas les critères du plan de dix ans. Il précise que ce chemin pourrait faire l'objet d'une amélioration locale.

DIRECTIVE: QUE l'administration soit mandatée de préparer un rapport relativement à la condition du chemin Brazeau et qu'une communication soit faite avec les résidents du chemin suite à ce rapport.

DIRECTIVE: QUE le budget en capital proposé de 525 000$ pour le pavage du chemin Lacroix soit approuvé.

DIRECTIVE: QUE le budget en capital proposé de 490 000$ pour le pavage du chemin Vinette soit approuvé.

DIRECTIVE: QUE le budget en capital proposé de 40 000$ pour les analyses géotechniques pour les chemins Du Lac et Lavigne soit approuvé.

DIRECTIVE: QUE le budget en capital proposé de 175 000$ pour le revêtement des rues Charron, Marion, Blue Jay et Cardinal soit utilisé pour terminer le revêtement du chemin de la vieille 17 et la petite section du chemin Bouvier.

DIRECTIVE: QUE le budget en capital proposé de 200 000$ pour le remplacement des ponceaux St-Félix, Lacasse, Bouvier et Butler soit approuvé.

DIRECTIVE: QUE le budget en capital proposé de 70 000$ pour la fermeture de l'entrée de l'aréna de Clarence-Rockland soit différé.

DIRECTIVE: QUE le budget en capital proposé de 75 000$ pour les travaux de fossé sur terrain privé - chemin Baseline soit rejeté.

DIRECTIVE: QUE le budget en capital proposé de 250 000$ pour l'amélioration de drainage du chemin Clark soit rejeté.

DIRECTIVE: QUE le budget en capital proposé de 150 000$ pour le remplacement de ponceaux pour le chemin Boundary/Canaan soit approuvé.

DIRECTIVE: QUE le budget en capital proposé de 87 000$ pour le pluvial Rodrigue soit approuvé.

DIRECTIVE: QUE le budget en capital proposé de 15 200$ pour le pavage du chemin McTeer soit approuvé.

DIRECTIVE: QUE le budget en capital proposé de 45 000$ pour l'achat d'un camion 3/4 tonne pour les travaux publics soit approuvé.

DIRECTIVE: QUE le budget en capital proposé de 25 000$ pour l'ajout d'un camion de service usagé pour les mécaniciens soit approuvé.

DIRECTIVE: QUE le budget en capital proposé de 160 000$ pour le remplacement d'une pelle retrocaveuse soit approuvé et qu'un rapport soit préparé pour la considération du conseil relativement aux couts de location.

DIRECTIVE: QUE le budget en capital proposé de 200 000$ pour la mise à jour du plan des égouts sanitaires soit approuvé.

DIRECTIVE: QUE le budget en capital proposé de 89 000$ pour le remplacement de l'égout sanitaire de la rue Albert soit approuvé.

DIRECTIVE: QUE le budget en capital proposé de 75 000$ pour le remplacement des rotors de pompe mélangeuse soit approuvé.

DIRECTIVE: QUE le budget en capital proposé de 200 000$ pour le PRV aqueduc de Clarence Creek soit approuvé.

DIRECTIVE: QUE le budget en capital proposé de 109 000$ pour la conception de la rue Wallace soit approuvée.

DIRECTIVE: QUE le budget en capital proposé de 35 000$ pour les clôtures au site d'enfouissement soit approuvée.

DIRECTIVE: QUE l'administration soit mandatée de réviser le budget proposé afin de réduire l'augmentation du taux de taxe d'environ 3%.

8. Ajournement

Le maire lève l’assemblée à 22h02.

_____ _____

Guy Desjardins, Maire Maryse St-Pierre, greffière adjointe

CORPORATION OF THE

CITY OF CLARENCE-ROCKLAND

REGULAR MEETING MINUTES

January 21, 2019
Council Chambers
415 rue Lemay Street, Clarence Creek, Ont.

PRESENT:	Guy Desjardins, Mayor
	Samuel Cardarelli, Councillor Ward 1
	Mario Zanth, Councillor Ward 2
	Carl Grimard, Councillor Ward 3
	Don Bouchard, Councillor Ward 4
	André J. Lalonde, Councillor Ward 5
	Michel Levert, Councillor Ward 7
	Diane Choinière, Councillor Ward 8
	Monique Ouellet, Clerk
	Maryse St-Pierre, Deputy Clerk
ABSENT:	Christian Simard, Councillor Ward 6

1. Opening of the meeting

Mayor Desjardins calls the meeting to order at 6:00 p.m.

2. Prayer

Councillor Carl Grimard recites the prayer.

3. Adoption of the agenda

RESOLUTION 2019-01
Moved by Mario Zanth
Seconded by Samuel Cardarelli

BE IT RESOLVED THAT the agenda be adopted with the following amendment:

5.5. Hiring - Civil engineering technician

CARRIED, as modified

4. Disclosure of pecuniary interests (none)

5. Closed Meeting

RESOLUTION 2019-02
Moved by Carl Grimard
Seconded by Mario Zanth

BE IT RESOLVED THAT the regular meeting be adjourned in order to discuss the following items, as stipulated in Section 239 of the *Municipal Act, 2001*, as amended:

5.1. Adoption of the minutes of December 17, 2018
5.2. Staffing update - Lame Duck period 2018
5.3. Hiring - Chief Information Officer
5.4. Human Resources matter - Director of Finance and Economic Development
5.5. Hiring - Civil engineering technician

CARRIED

Members of Council move to the conference room adjacent to the Council Chambers at 6:03 pm and return to the Council Chambers at 6:47 pm.

RESOLUTION 2019-03
Moved by Carl Grimard
Seconded by Don Bouchard

BE IT RESOLVED THAT the closed session be adjourned to resume the regular meeting.

CARRIED

6. Closed Meeting report

Mayor Desjardins informs the members of the public that Council discussed some matters in closed session and that a resolution should be considered.

RESOLUTION 2019-04
Moved by Carl Grimard
Seconded by Samuel Cardarelli

BE IT RESOLVED THAT Municipal Council hereby accepts the hiring of Mr. Michel Cousineau as full-time Chief Information Officer, effective February 19, 2019 and that he be subject to a probationary period of six (6) months; and;

BE IT ALSO RESOLVED THAT Mr. Michel Cousineau's salary is established at Level 8, between class 3 and 4, of the current non-unionized employee's salary grid, as recommended

CARRIED

7. Announcements (none)

8. Comment/Question Period (none)

9. Council Members' Items

9.1 Member's Resolution presented by Councillor Don Bouchard regarding the creation of an Economic Development Advisory Committee

RESOLUTION 2019-05
Moved by Don Bouchard
Seconded by Diane Choinière

WHEREAS the revenues from non-residential taxes are only at 5.87% and the economic development in Clarence-Rockland has slowed down significantly in the last few years; and

WHEREAS the City does not have an Economic Development Plan; and

WHEREAS an economic development committee would provide recommendations for developing an Economic Development Plan for the City of Clarence-Rockland;

BE IT RESOLVED THAT Council supports the idea of establishing an Economic Development Advisory Committee for the City of Clarence-Rockland; and

BE IT RESOLVED THAT the Administration be mandated to work with a working group of up to three (3) council members, appointed by the Mayor, to elaborate the terms of reference for the establishment of an Economic Development Advisory Committee for the City of Clarence-Rockland, for Council's consideration.

CARRIED

10. Consent Items

RESOLUTION 2019-06
Moved by Michel Levert
Seconded by Samuel Cardarelli

BE IT RESOLVED THAT the following items, as identified under the consent items category on the regular meeting agenda of January 21, 2019, be adopted:

10.1. Adoption of the minutes of the following meetings :

a. Regular meeting of December 17, 2018
b. Committee of the Whole meeting of December 17, 2018

10.2. Receipt of the minutes of the following meetings:

a. Committee of Adjustment - October 24, 2018

10.3. The following recommendations from Committee of the Whole of December 17, 2018

a. Resolution to support the Department of Infrastructure and Planning strategy in regard to the Notre Dame Landfill Site and Caron Street Storm Water Management

10.4. Resolution to adopt the salaries paid from December 2, 2018, to December 29, 2018, in the gross amount of $834,185.34 and net amount of $594,399.77

10.5. Resolution to adopt the accounts paid from December 8, 2018, to January 12, 2019, in the amount of $9,131,267.60

10.6. Resolution to adopt the tax reductions under Sections 357-358 of the Municipal Act

10.7. Resolution for the nomination of nine (9) volunteer firefighters

10.8. Resolution to recognize the 2019 Clarence Creek Carnival as an event of municipal significance

10.9. Resolution to adopt the Health and safety Policy

10.10. Resolution to adopt the 2019 Social Media Policy

10.11. Resolution to accept the Clarence-Rockland Pickleball League's request to be recognized as a non-profit organization

CARRIED

Text of the resolutions adopted by consent under Resolution 2019-06:

10.3a. WHEREAS *City staff has been and continues to work cooperatively with MECP staff to secure approval of a closure plan for the former Notre Dame Landfill Site; and*

WHEREAS *studies and analyses are currently underway to address the stormwater discharge from the Caron Street sewer system into the landfill site;*

BE IT RESOLVED THAT *Municipal Council supports the Department's strategy, as detailed in Report INF2018-053, to secure the required Ministry approvals for both of these undertakings.*

10.4 ***BE IT RESOLVED THAT*** *the salaries paid from December 2, 2018, to December 29, 2018, in the gross amount of $834,185.34 and net amount of $594,399.77 be adopted as recommended.*

10.5 ***BE IT RESOLVED THAT*** *the accounts paid from December 8, 2018, to January 12, 2019, in the amount of $9,131,267.60 be adopted as recommended.*

10.6 ***BE IT RESOLVED THAT*** *Council hereby adopts tax reductions in the amount of $1,110.25 City's share, being applications under sections 357 & 358 of the Municipal Act, against all lands concerned, as described in Schedule "A" to Report No. FIN2019-005.*

10.7 ***BE IT RESOLVED THAT*** *Municipal Council hereby accepts the hiring of Kevin McKenzie, Steven Saumier, Jordan Legros, Audrey-Ann Robinson, Claudie Latulippe-Morin, Eric Boyer, Michael Clement, Casey Gentile and Nikolas Dupuis, as volunteer firefighters, effective January 21, 2019; and*

BE IT FURTHER RESOLVED THAT *the said firefighters be subject to a mandatory probation period of one year once all of their mandatory training is completed; and*

BE IT FINALLY RESOLVED THAT *the said firefighters' salary be established at the probationary wage as established in the collective agreement, as recommended.*

10.8 ***BE IT RESOLVED THAT*** *Municipal Council of the City of Clarence-Rockland hereby confirms that the 2019 Clarence Creek Carnival which will take place on February 8 to February 17, 2019 be recognized as an event of municipal significance in order to allow the issuance of a special event permit from the Alcohol and Gaming Commission of Ontario.*

10.9 ***WHEREAS*** *the Council of the City of Clarence-Rockland acknowledges the importance of Health and Safety in the conduct of its operation and business and recognizes that accidents and injuries can be prevented; and*

WHEREAS *Council accepts the responsibility to ensure compliance with legislation and to participate in all activities aimed at improving Health and Safety;*

BE IT RESOLVED THAT *Municipal Council hereby adopts the 2019 Health and Safety policy; and*

BE IT FURTHER RESOLVED THAT *the Occupational Health and safety Policy statement dated 2007 be repealed.*

10.10 ***WHEREAS*** *the Council of the City of Clarence-Rockland acknowledges the importance of a Social Media policy and recognizes that such a policy needs to be implemented;*

BE IT RESOLVED THAT *Municipal Council hereby adopts the 2019 Social Media Policy.*

10.11 ***BE IT RESOLVED THAT*** *Municipal Council accepts the Clarence-Rockland Pickleball League's request to be recognized as a non-profit organization in order to added to the list of non-profit organizations in the Community Hall rental policy, as recommended.*

11. Committee/Staff Reports

11.1 Wastewater Master Plan Phase 1

RESOLUTION 2019-07
Moved by Mario Zanth
Seconded by Don Bouchard

WHEREAS there is a requirement for the City to update its current Development Charge Bylaw by no later than February, 2020; and

WHEREAS there is a necessity to undertake Master Servicing Studies to identify growth related impacts for key municipal infrastructure; and

WHEREAS the Master Servicing Studies for transportation, storm, and the water infrastructure are currently underway; and

WHEREAS there is an outstanding requirement to initiate the Master Servicing Study for wastewater;

BE IT RESOLVED THAT the provisions of the City's Procurement Policy and Procedures be waived in order to retain Jacobs to an upset limit of $75,000 to complete Phase 1 of the Wastewater Master Plan as recommended in Report No. INF2019-002; and

BE IT FURTHER RESOLVED THAT this project be funded from the Sanitary Sewer Development Charges Reserve.

CARRIED

11.2 Enbridge Pipelines Grant for Carbon Monoxide Pulse Oximeters

RESOLUTION 2019-08
Moved by Carl Grimard
Seconded by Diane Choinière

BE IT RESOLVED THAT Council accept the grant of $7,500 from Enbridge Pipelines, which was provided towards the purchase of three (3) carbon monoxide pulse oximeters; and

BE IT RESOLVED THAT Council authorize the Fire Chief to proceed with the purchase of three (3) carbon monoxide pulse oximeters at a total price of $9,480 (+HST); and

BE IT RESOLVED THAT the balance of the funding for this purchase to be funded from the Fire Department's 2019 operating budget.

CARRIED

11.3 Online credit card payments

RESOLUTION 2019-09
Moved by Diane Choinière
Seconded by Mario Zanth

BE IT RESOLVED THAT Council authorize the Treasurer to sign the agreement for online payments by credit card with Paymentus.

CARRIED

12. By-laws

RESOLUTION 2019-10
Moved by Samuel Cardarelli
Seconded by Michel Levert

BE IT RESOLVED THAT the following by-laws be adopted:

12.3. 2019-03 -to authorize the signature of a rental agreement with the Ontario Youth Wellness Hub - Champlain East – Rockland

12.4. 2019-05 - to adopt the interim tax levies for the year 2019

12.5. 2019-06 - Part-lot control, for part of Lot 1 Plan 50M-308

12.6. 2019-07 - Zoning By-law Amendment – Jacques Rochon – Part of Lot C, Concession 3

12.7. 2019-08 - Zoning By-law Amendment – Suzanne & Jean-Marie Godin – 1884 Henrie Road

CARRIED

12.1 2019-01 - Zoning By-Law Amendment - 1262 Alma

RESOLUTION 2019-11
Moved by Carl Grimard
Seconded by Don Bouchard

BE IT RESOLVED THAT Council adopts By-Law 2019-01, being a by-law to amend Zoning By-Law 2016-10, in order to change the zoning category of the property located at 1262 Alma Street from “Urban Residential First Density (R1) Zone” to “Urban Residential Second Density (R2) Zone”, in order to permit the use of semi-detached dwelling on the property, as recommended by the Infrastructure and Planning Department.

CARRIED

12.2 2019-02 - Zoning By-law Amendment - technical anomalies

Mrs. Monique Ouellet explains that the proposed by-law was further amended to include the necessary wording under section 1.6. of the Zoning by-law 2016-10, in order to allow the establishment of set fines under the *Provincial Offences Act*.

RESOLUTION 2019-12
Moved by Don Bouchard
Seconded by Mario Zanth

BE IT RESOLVED THAT Council adopt By-Law 2019-02, being a by-law to amend Zoning By-law 2016-10 of the City of Clarence-Rockland, in order to resolve technical anomalies and make certain corrections in the by-law.

CARRIED

13. Confirmatory By-law

RESOLUTION 2019-13
Moved by Mario Zanth
Seconded by Don Bouchard

BE IT RESOLVED THAT By-law no. 2019-04, being a confirmatory by-law for the regular meeting of January 21, 2019, be adopted.

CARRIED

14. Adjournment

Mayor Desjardins adjourns the meeting at 7:35 pm.

_____	_____
Guy Desjardins, Mayor	Maryse St-Pierre, Deputy Clerk

CORPORATION DE LA

CITÉ DE CLARENCE-ROCKLAND

RÉUNION RÉGULIÈRE - PROCÈS-VERBAL

le 21 janvier 2019
Salle du Conseil
415 rue Lemay Street, Clarence Creek, Ont.

PRÉSENT:	Guy Desjardins, maire
	Samuel Cardarelli, conseiller quartier 1
	Mario Zanth, conseiller du quartier 2
	Carl Grimard, conseiller du quartier 3
	Don Bouchard, conseiller quartier 4
	André J. Lalonde, conseiller du quartier 5
	Michel Levert, conseiller du quartier 7
	Diane Choinière, conseillère du quartier 8
	Monique Ouellet, greffière
	Maryse St-Pierre, greffière adjointe
ABSENT:	Christian Simard, conseiller quartier 6

1. Ouverture de la réunion

Le maire Desjardins ouvre la réunion à 18h.

2. Prière

Le conseiller Carl Grimard fait la lecture de la prière.

3. Adoption de l'ordre du jour

RÉSOLUTION 2019-01
Proposée par Mario Zanth
Appuyée par Samuel Cardarelli

QU'IL SOIT RÉSOLU QUE l'ordre du jour soit adopté avec la modification suivante:

5.5. Embauche - technicien en génie civil

ADOPTÉE, telle que modifiée

4. Déclarations d'intérêts pécuniaires (aucune)

5. Réunion à huis clos

RÉSOLUTION 2019-02
Proposée par Carl Grimard
Appuyée par Mario Zanth

QU'IL SOIT RÉSOLU QUE la réunion régulière du conseil municipal soit ajournée afin de tenir une session à huis clos pour discuter des sujets suivants, tel que stipulé à la section 239 de la *Loi sur les municipalités 2001*, tel que modifiée :

5.1. Adoption du procès-verbal du 17 décembre 2018
5.2. Mise à jour de la dotation - Période d'interrègne 2018 (Lame duck)
5.3. Embauche - Agent en chef des systèmes d'information
5.4. Dossier des ressources humaines - Directeur des finances et du développement économique
5.5. Embauche - technicien en génie civil

ADOPTÉE

Les membres du conseil se retirent dans la salle de conférence adjacente à la salle du conseil à 18h03 et retournent dans la salle du conseil à 18h47.

RÉSOLUTION 2019-03
Proposée par Carl Grimard
Appuyée par Don Bouchard

QU'IL SOIT RÉSOLU QUE la réunion à huis clos soit ajournée afin de retourner en réunion régulière.

ADOPTÉE

6. Rapport de la réunion à huis clos

Le maire Desjardins informe les membres du public que le conseil a discuté de dossiers à huis clos et qu'une résolution doit être considérée.

RÉSOLUTION 2019-04
Proposée par Carl Grimard
Appuyée par Samuel Cardarelli

QU'IL SOIT RÉSOLU QUE le conseil municipal accepte l'embauche de M. Michel Cousineau à titre d'Agent en Chef des Systèmes d'Informations à temps plein, effectif le 19 février 2019 et que celui-ci soit sujet à une période probatoire de six (6) mois; et

QU'IL SOIT ÉGALEMENT RÉSOLU QUE le salaire de M. Michel Cousineau soit établi à la Classe 8, entre le niveau 3 et 4 de la grille salariale en vigueur des employés non syndiqués, tel que recommandé.

ADOPTÉE

7. Annonces (aucune)

8. Période de Questions/Commentaires (aucune)

9. Items des membres du Conseil

9.1 Résolution de membre présentée par le conseiller Don Bouchard concernant la création d'un comité consultatif sur le développement économique

RÉSOLUTION 2019-05
Proposée par Don Bouchard
Appuyée par Diane Choinière

ATTENDU QUE les revenus des taxes non résidentielles sont de seulement 5,87% et que le développement économique de la Cité Clarence-Rockland a beaucoup ralenti dans les dernières années; et

ATTENDU QUE la Cité n'a pas de plan de développement économique; et

ATTENDU QU'un comité sur le développement économique permettrait d'obtenir des recommandations pour élaborer un plan de développement économique pour la Cité de Clarence-Rockland;

QU'IL SOIT RÉSOLU QUE le conseil municipal appuie l'idée d'établir un comité consultatif en matière de développement économique pour la Cité de Clarence-Rockland; et

QU'IL SOIT RÉSOLU QUE l'administration soit mandatée à travailler avec un groupe de travail composé d'un maximum de trois (3) membres du conseil, nommés par le maire, afin d'élaborer les termes de référence dans le but d'établir un comité consultatif en matière de développement économique de la Cité de Clarence-Rockland, pour la considération du conseil.

ADOPTÉE

10. Items par consentement

RÉSOLUTION 2019-06
Proposée par Michel Levert
Appuyée par Samuel Cardarelli

QU'IL SOIT RÉSOLU QUE les items suivants, tels qu'identifiés sous la rubrique «items par consentement» à l'ordre du jour de la réunion régulière du 21 janvier 2019, soient adoptés :

10.1. Adoption des procès-verbaux des réunions suivantes:

a. Réunion régulière du 17 décembre 2018
b. Comité plénier du 17 décembre 2018

10.2. Réception du procès-verbal de la réunion suivante:
a. Comité de dérogation - 24 octobre 2018

10.3. La recommandation suivante du comité plénier du 17 décembre 2018
a. Résolution pour appuyer la stratégie du département d'infrastructure et aménagement du territoire relativement au site d'enfouissement Notre-Dame et à la gestion de l'égout pluvial de la rue Caron

10.4. Résolution pour adopter les salaires payés pour la période du 2 décembre 2018 au 29 décembre 2018, au montant brut de 834 185,34$ et montant net de 594 399,77$

10.5. Résolution pour adopter les comptes payés pour la période du 8 décembre 2018 au 12 janvier 2019, au montant de 9 131 267,60 $

10.6. Résolution pour adopter les réductions de taxes sous les articles 357-358 de la Loi sur les municipalités

10.7. Résolution pour la nomination de neuf (9) pompiers volontaires

10.8. Résolution pour reconnaitre le Carnaval de Clarence Creek 2019 comme étant un événement d'envergure municipale

10.9. Résolution pour adopter la politique de santé et sécurité

10.10. Résolution pour adopter la politique des médias sociaux 2019

10.11. Résolution pour accepter la demande de reconnaissance de la Ligue de Pickleball de Clarence-Rockland

ADOPTÉE

Texte des résolutions adoptées par consentement telles qu'identifiées dans la résolution 2019-06

10.3a. ATTENDU QUE *le personnel de la Cité continue de collaborer avec le personnel de MECP pour faire approuver un plan de fermeture de l'ancien site d'enfouissement de Notre-Dame ; et*

ATTENDU QUE *des études et des analyses sont en cours pour réduire la décharge des eaux pluviales du système d'égout de la rue Caron dans le site d'enfouissement ;*

QU'IL SOIT RÉSOLU QUE *le conseil municipal appuie la stratégie du département, tel que décrit dans au rapport INF2018-053, afin d'obtenir les approbations requises du ministère pour ces deux projets.*

10.4 ***QU'IL SOIT RÉSOLU QUE*** *les salaires payés pour la période du 2 décembre 2018 au 29 décembre 2018, au montant brut de 834 185,34 $ et montant net de 594 399,77 $, soient adoptés tel que recommandé.*

10.5 ***QU'IL SOIT RÉSOLU QUE*** *les comptes payés pour la période du 8 décembre 2018 au 12 janvier 2019, au montant de 9 131 267,60 $ soient adoptés tel que recommandé.*

10.6 ***QU'IL SOIT RÉSOLU QUE*** *le Conseil adopte les réductions de taxes au montant de 1 110,25 $, étant la part de la Cité en vertu des sections 357 & 358 de la Loi sur les municipalités, contre les propriétés foncières décrites dans la cédule « A » du rapport numéro FIN2019-005.*

10.7 ***QU'IL SOIT RÉSOLU QUE*** *le conseil municipal accepte l'embauche de Kevin McKenzie, Steven Saumier, Jordan Legros, Audrey-Ann Robinson, Claudie Latulippe-Morin, Eric Boyer, Michael Clement, Casey Gentile et Nikolas Dupuis, à titre de pompier volontaire, effectif le 21 janvier 2019; et*

QU'IL SOIT ÉGALEMENT RÉSOLU QUE *ces pompiers soient en probation obligatoire pour une période d'un an une fois leur formation requise complétée; et*

QU'IL SOIT FINALEMENT RÉSOLU QUE *le salaire de ces pompiers soit établi au salaire probatoire établi dans la convention collective, tel que recommandé.*

10.8 ***QU'IL SOIT RÉSOLU QUE*** *le conseil municipal de la Cité de Clarence-Rockland déclare le Carnaval de Clarence Creek 2019 qui aura lieu du 8 au 17 février 2019, comme étant un événement d'envergure municipale afin de permettre qu'un permis d'occasion spéciale soit émis par la Commission des Alcools et des Jeux de l'Ontario.*

10.9 ***ATTENDU QUE*** *le conseil de la Cité de Clarence-Rockland reconnait l'importance de la santé et sécurité dans la conduite de ses opérations et de ses affaires et reconnait qu'il est possible de prévenir accidents et les blessures; et*

ATTENDU QUE *le conseil accepte la responsabilité de veiller au respect de la législation et de participer à toutes les activités visant à améliorer la santé et sécurité;*

QU'IL SOIT RÉSOLU QUE *le conseil municipal adopte la politique 2019 en matière de santé et sécurité; et*

QU'IL SOIT AUSSI RÉSOLU QUE *l'énoncé de la politique sur la santé et la sécurité au travail daté 2007 soit abrogée.*

10.10 ***ATTENDU QUE*** *le conseil de la Cité de Clarence-Rockland reconnaît l'importance d'une politique relative aux médias sociaux et reconnaît qu'une telle politique doit être mise en œuvre;*

QU'IL SOIT RÉSOLU QUE *le conseil municipal adopte la politique d'usage personnel des médias sociaux 2019.*

10.11 ***QU'IL SOIT RÉSOLU QUE*** *le conseil municipal accepte la demande de la Ligue de pickleball de Clarence-Rockland d'être reconnue à titre d'organisme sans but lucratif afin qu'elle soit ajoutée à la liste d'organisme à but non lucratif reconnu dans la politique de location de salles communautaires, tel que recommandé.*

11. Rapports des Comités/Services

11.1 Phase 1 du plan maître des eaux usées

RÉSOLUTION 2019-07
Proposée par Mario Zanth
Appuyée par Don Bouchard

ATTENDU QUE la Cité est tenue de mettre à jour son règlement sur les redevances d'aménagement au plus tard en février 2020; et

ATTENDU QU'il est nécessaire d'entreprendre une étude de viabilisation afin d'identifier les impacts relatifs à la croissance pour les infrastructures municipales clés; et

ATTENDU QUE les études de viabilisation pour le transport, les égouts pluviaux et l'aqueduc sont présentement en cours; et

ATTENDU QU'il y a un besoin important de procéder à l'étude de viabilisation pour les eaux usées;

QU'IL SOIT RÉSOLU QUE les dispositions de la politique d'approvisionnement de la Cité soient dispensées pour recourir aux services de Jacobs pour une limite

maximale de 75 000$ afin de compléter la phase 1 du plan maître des eaux usées, tel que recommandé au rapport INF2019-002; et

QU'IL SOIT ÉGALEMENT RÉSOLU QUE ce projet soit financé par la réserve des frais de développement pour les égouts sanitaires.

ADOPTÉE

11.2 Subvention d'Enbridge Pipelines pour des oxymètres de pouls au monoxyde de carbone

RÉSOLUTION 2019-08
Proposée par Carl Grimard
Appuyée par Diane Choinière

QU'IL SOIT RÉSOLU QUE le conseil accepte la subvention de 7 500 $ d'Enbridge Pipelines, qui a été accordée pour l'achat de trois (3) oxymètres de pouls au monoxyde de carbone; et

QU'IL SOIT RÉSOLU QUE le conseil autorise le chef des pompiers à procéder à l'achat de trois (3) oxymètres de pouls au monoxyde de carbone au coût total de 9 480 $ (+ TVH); et

QU'IL SOIT RÉSOLU QUE la balance du financement de cet achat provienne du budget de fonctionnement 2019 du service des incendies.

ADOPTÉE

11.3 Paiements en ligne par carte de crédit

RÉSOLUTION 2019-09
Proposée par Diane Choinière
Appuyée par Mario Zanth

QU'IL SOIT RÉSOLU QUE le Conseil autorise le trésorier à signer l'entente de service de paiement en ligne par carte de crédit avec Paymentus.

ADOPTÉE

12. Règlements municipaux

RÉSOLUTION 2019-10
Proposée par Samuel Cardarelli
Appuyée par Michel Levert

QU'IL SOIT RÉSOLU QUE les règlements municipaux suivants soient adoptés

12.3. 2019-03 -pour autoriser la signature d'une entente de location avec le Carrefour bien-être pour les jeunes de l'Ontario - Champlain Est – Site Rockland

12.4. 2019-05 - pour adopter les taxes intérimaires pour l'année 2019

12.5. 2019-06 - Règlementation de parties de lots, applicable à une partie du Lot 1 du plan 50M-308

12.6. 2019-07 - Amendement au règlement de zonage – Jacques Rochon – Partie du lot C, concession 3

12.7. 2019-08 - Amendement au règlement de zonage – Suzanne & Jean-Marie Godin – 1884 chemin Henrie

ADOPTÉE

12.1 2019-01 - Amendement au règlement de zonage - 1262 Alma

RÉSOLUTION 2019-11
Proposée par Carl Grimard
Appuyée par Don Bouchard

QU'IL SOIT RÉSOLU QUE le conseil municipal adopte le règlement 2019-01, étant un règlement pour modifier le Règlement de Zonage 2016-10 afin de changer le zonage de la propriété au 1262 rue Alma de « Zone Résidentielle Urbaine de Densité 1 – (R1) », à « Zone Résidentielle Urbaine de Densité 2 – (R2) », afin de permettre une habitation jumelée sur le terrain, tel que recommandé par le Département d'infrastructure et aménagement du territoire.

ADOPTÉE

12.2 2019-02 - Amendement au règlement de zonage - anomalies techniques

Mme Monique Ouellet explique que règlement proposé comporte un amendement supplémentaire en vue d'inclure le texte approprié sous la section 1.6 du règlement de zonage 2016-10, dans le but de permettre l'établissement d'amendes fixes sous la *Loi sur les infractions provinciales*.

RÉSOLUTION 2019-12
Proposée par Don Bouchard
Appuyée par Mario Zanth

QU'IL SOIT RÉSOLU QUE le conseil adopte le règlement 2019-02, étant un règlement pour modifier le règlement de zonage 2016-10 de la Cité de Clarence-Rockland, afin de régler certaines anomalies techniques trouvées dans le texte du règlement ainsi que d'y apporter certaines corrections.

ADOPTÉE

13. Règlement de confirmation

RÉSOLUTION 2019-13
Proposée par Mario Zanth
Appuyée par Don Bouchard

QU'IL SOIT RÉSOLU QUE le règlement no. 2019-04, étant un règlement de confirmation pour la réunion régulière du 21 janvier 2019, soit adopté.

ADOPTÉE

14. Ajournement

Le maire Desjardins lève l'assemblée à 19h35.

_____ _____

Guy Desjardins, maire Maryse St-Pierre, greffière adjointe

CORPORATION OF THE

CITY OF CLARENCE-ROCKLAND

COMMITTEE OF THE WHOLE MINUTES

January 21, 2019
Council Chambers
415 rue Lemay Street, Clarence Creek, Ont.

PRESENT:	Guy Desjardins, Mayor
	Samuel Cardarelli, Councillor Ward 1
	Mario Zanth, Councillor Ward 2
	Carl Grimard, Councillor Ward 3
	Don Bouchard, Councillor Ward 4
	André J. Lalonde, Councillor Ward 5
	Michel Levert, Councillor Ward 7
	Diane Choinière, Councillor Ward 8
	Monique Ouellet, Clerk
	Maryse St-Pierre, Deputy Clerk
ABSENT:	Christian Simard, Councillor Ward 6

1. Opening of the meeting

Mayor Desjardins calls the meeting to order at 8:00 pm.

2. Adoption of the agenda

RECOMMENDATION COW2019-06
Moved by Carl Grimard
Seconded by Michel Levert

THAT the agenda be adopted as presented.

CARRIED

5. Petitions / Correspondence

5.1 Petition presented by Michelle Lalonde requesting sewer services for Fairway Drive, Club house, David and Eagle streets and part of Caron Street

Further to discussions, the Committee of the Whole mandates the Director of Infrastructure and Planning to prepare a report for Council's consideration further to this petition.

6. Notice of Motion (none)

7. Comment/Question Period (none)

8. Report from the United Counties of Prescott and Russell

Mayor Desjardins explains some of the impacts of the UCPR budget discussions.

9. Committee/Staff Reports

9.1 Alterations to balcony located at the Paroisse Très-Sainte-Trinité Presbytery

RECOMMENDATION COW2019-07
Moved by André J. Lalonde
Seconded by Mario Zanth

WHEREAS the balcony located at the Paroisse Très-Sainte-Trinité Presbytery (2178-2180 Laurier Street) is in very bad shape and must be reconstructed; and

WHEREAS the Presbytery is designated as being of cultural heritage value; and

WHEREAS the reconstruction of the Presbytery's balcony, as it is constructed today, would be too costly;

THAT the Committee of the Whole recommends that Council approve the alterations to the presbytery balcony, as described on the plans prepared by Michanie Construction dated August 31, 2018.

CARRIED

9.2 Budget status report – November 30, 2018

RECOMMENDATION COW2019-08
Moved by Don Bouchard
Seconded by Samuel Cardarelli

THAT Report No. FIN2018-048, being the financial operating budget status for the period ending November 30, 2018, be received as information.

CARRIED

9.3 Tax Administration Policy

RECOMMENDATION COW2019-09
Moved by Michel Levert
Seconded by Don Bouchard

THAT the Committee of Whole recommends that Council adopts the revised Tax Administration Policy, as recommended in report no. FIN2018-050.

CARRIED

9.4 Monthly statistics - Construction - December 2018

RECOMMENDATION COW2019-10
Moved by Diane Choinière
Seconded by Don Bouchard

THAT the Construction monthly report be received as information.

CARRIED

9.5 Protective Services Monthly Statistics (November-December 2018)

RECOMMENDATION COW2019-11
Moved by Carl Grimard
Seconded by Michel Levert

THAT Reports No. PRO2019-004 and No. PRO2019-005 in regards to monthly statistics, be received as information.

CARRIED

10. Other items

Further to questions, Mr. Julian Lenhart confirms that he will follow up with his team regarding the surface treatment on St-Félix Road.

Further to questions, Mr. Lenhart confirms that the LED street lights project will end in February.

Further to questions, Mr. Lenhart confirms that he will follow up with the developer regarding burned lights on Docteur Corbeil Boulevard.

Mayor Desjardins congratulates the Department of Infrastructure for the snow removal operations during the last storm.

11. Adjournment

The Mayor adjourns the meeting at 8:15 p.m.

_____ _____

Guy Desjardins, Mayor Maryse St-Pierre, Deputy Clerk

CORPORATION DE LA

CITÉ DE CLARENCE-ROCKLAND

PROCÈS-VERBAL DU COMITÉ PLÉNIER

le 21 janvier 2019
Salle du Conseil
415 rue Lemay Street, Clarence Creek, Ont.

PRÉSENT:	Guy Desjardins, maire
	Samuel Cardarelli, conseiller quartier 1
	Mario Zanth, conseiller du quartier 2
	Carl Grimard, conseiller du quartier 3
	Don Bouchard, conseiller quartier 4
	André J. Lalonde, conseiller du quartier 5
	Michel Levert, conseiller du quartier 7
	Diane Choinière, conseillère du quartier 8
	Monique Ouellet, greffière
	Maryse St-Pierre, greffière adjointe
ABSENT:	Christian Simard, conseiller quartier 6

1. Ouverture de la réunion

Le maire Desjardins ouvre la réunion à 20h.

2. Adoption de l'ordre du jour

RECOMMANDATION COW2019-06
Proposée par Carl Grimard
Appuyée par Michel Levert

QUE l'ordre du jour soit adopté tel que présenté.

ADOPTÉE

5. Pétitions / Correspondance

5.1 Pétition présentée par Michelle Lalonde demandant un service d'égouts pour les rues Fairway, Eagle, Club house et David et une partie de la rue Caron

Suite aux discussions, le conseil mandate le service de l'Infrastructure et de l'aménagement du territoire de préparer un rapport pour la considération du conseil pour donner suite à cette pétition.

6. Avis de motion (aucun)

7. Période de Questions/Commentaires (aucune)

8. Rapport des Comtés unis de Prescott et Russell

Le maire Desjardins explique quelques impacts des délibérations budgétaires des CUPR.

9. Rapports des Comités/Services

9.1 Modifications au balcon du presbytère de la Paroisse Très-Sainte-Trinité

RECOMMANDATION COW2019-07
Proposée par André J. Lalonde
Appuyée par Mario Zanth

ATTENDU QUE le balcon situé au presbytère de la Paroisse Très-Sainte-Trinité (2178-2180 rue Laurier) est en très mauvais état et doit être reconstruit; et

ATTENDU QUE le presbytère est désigné comme ayant une valeur sur le Plan du patrimoine culturel; et

ATTENDU QUE la reconstruction du balcon du presbytère, tel qu'il est bâti présentement, s'avère trop couteuse.

QUE le comité plénier recommande au conseil d'approuver les modifications au balcon du presbytère, tel que présenté par les plans de Michanie Construction datés du 31 aout 2018.

ADOPTÉE

9.2 Rapport financier sur le budget opérationnel – 30 novembre 2018

RECOMMANDATION COW2019-08
Proposée par Don Bouchard
Appuyée par Samuel Cardarelli

QUE le rapport no. FIN2018-048, étant le rapport financier sur le budget opérationnel pour la période se terminant le 30 novembre, soit reçu à titre d'information.

ADOPTÉE

9.3 Politique d'administration et collecte des taxes foncières

RECOMMANDATION COW2019-09
Proposée par Michel Levert
Appuyée par Don Bouchard

QUE le Comité plénier recommande au Conseil d'adopter la politique sur l'administration des taxes foncières révisée, tel que recommandé au rapport FIN2018-050.

ADOPTÉE

9.4 Statistiques mensuelles - construction - décembre 2018

RECOMMANDATION COW2019-10
Proposée par Diane Choinière
Appuyée par Don Bouchard

QUE le rapport mensuel de la construction soit reçu à titre d'information.

ADOPTÉE

9.5 Statistiques mensuelles du service de la Protection (Novembre-Décembre 2018)

RECOMMANDATION COW2019-11
Proposée par Carl Grimard
Appuyée par Michel Levert

QUE les rapports No. PRO2019-004 et PRO2019-005, au sujet des statistiques mensuelles, soit reçues à titre d'information.

ADOPTÉE

10. Autres items

Suite aux questions, M. Julian Lenhart confirme qu'il fera le suivi avec son équipe relativement au dommage sur le traitement de surface du chemin St-Félix.

Suite aux questions, M. Lenhart confirme que le projet des lumières D.E.L. est prévu d'être terminé en février.

Suite aux questions, M. Lenhart confirme qu'il fera le suivi avec le développeur pour les lumières brûlées sur le boulevard Docteur Corbeil.

Le maire Desjardins félicite le département d'Infrastructure pour le travail de déneigement durant la tempête.

11. Ajournement

Le maire lève l'assemblée à 20h15.

_____ _____

Guy Desjardins, maire Maryse St-Pierre, greffière adjointe

CORPORATION OF THE

CITY OF CLARENCE-ROCKLAND

BUDGET SPECIAL MEETING MINUTES

January 22, 2019
Council Chambers
415 rue Lemay Street, Clarence Creek, Ont.

PRESENT:	Guy Desjardins, Mayor
	Samuel Cardarelli, Councillor Ward 1
	Mario Zanth, Councillor Ward 2
	Don Bouchard, Councillor Ward 4
	André J. Lalonde, Councillor Ward 5
	Christian Simard, Councillor Ward 6
	Michel Levert, Councillor Ward 7
	Diane Choinière, Councillor Ward 8
	Monique Ouellet, Clerk
	Maryse St-Pierre, Deputy Clerk
ABSENT:	Carl Grimard, Councillor Ward 3

1. Opening of the meeting

Mayor Desjardins calls the meeting to order at 6:00 pm.

2. Adoption of the agenda

RESOLUTION COW2019-12
Moved by Mario Zanth
Seconded by Don Bouchard

THAT the agenda be adopted as presented.

CARRIED

3. Disclosure of pecuniary interests (none)

Request from Mr. Yves Laviolette in regard to an erosion issue on his property:

Yves Laviolette, 1058 Baseline, explains that he has an erosion issue on his property, due to the City's drainage. He asks the City to reconsider the decision on the capital budget, in regard to ditch work on private property, which was

rejected. Mayor Desjardins explains that if there is a budget surplus, this item could perhaps be reconsidered.

4. Administration's 2019 Preliminary Budget Presentation

DIRECTIVE: THAT the interest on receivable account (1-3-0150-0551) be increased by $5,000.

DIRECTIVE: THAT the tax account name change account (1-3-0150-0556) be increased to $20,000.

DIRECTIVE: THAT the proposed budget in the amount of $30,000 for translation of council meetings filming be rejected.

DIRECTIVE: THAT the advertising account (1-4-1123-3005) be reduced to $0.

DIRECTIVE: THAT the committee account (1-4-1123-3139) be reduced to $0.

Further to questions, Mrs. Monique Ouellet explains that the integrity commissioner is required by law. She adds that should Council wish to appoint the same integrity commissioner that was appointed by the UCPR, it is possible.

DIRECTIVE: THAT the proposed budget in the amount of $10,000 for the integrity commissioner be reduced to 5,000$.

DIRECTIVE: THAT the proposed budget in the amount of $500 for meals (Human Resources) be rejected.

DIRECTIVE: THAT the proposed budget in the amount of $10,000 for leadership training and succession planning be approved.

DIRECTIVE: THAT the proposed budget in the amount of $2,500 for health and safety supplies be approved.

5. Finance Services' 2019 Preliminary Budget Presentation

DIRECTIVE: THAT the tax certificates revenue account be reduced to $4,000.

DIRECTIVE: THAT the proposed budget in the amount of $15,000 for the auditing be reduced to $7,500.

DIRECTIVE: THAT the proposed budget in the amount of $8,000 for the software be rejected.

DIRECTIVE: THAT the proposed budget in the amount of $3,000 for the booking software be rejected.

Proposed increase in user fees for General Government and Finance

Further to discussions, the following directive is adopted:

DIRECTIVE: THAT the proposed user fee increases for the General Government and Finance be approved.

Capital Budget

DIRECTIVE: THAT the proposed capital budget in the amount of $47,500 for the Information Technology Lifecycle be approved.

Further to questions, Mr. Julian Lenhart explains that the current asset management software does not suit all departments' needs, in particular for Finance. Mr. Robert Kehoe explains that this software search would be completed by the new Chief Information Officer.

DIRECTIVE: THAT the proposed capital budget in the amount of $50,000 for the Corporate asset and management software review be approved.

Mr. Frédéric Desnoyers explains the financing for the various capital projects discussed during the budget deliberations.

DIRECTIVE: THAT the proposed capital budget in the amount of $200,000 for the Rockland City Hall parking be rejected.

Further to questions, Mr. Brian Wilson explains that the fire burn container would avoid training in Ottawa. He adds that this project is currently on hold, due to the construction of fire stations.

DIRECTIVE: THAT the proposed capital budget in the amount of $75,000 for the fire burn container be rejected.

DIRECTIVE: THAT the proposed capital budget in the amount of $450,426 for the Bourget Train Station development be maintained.

Break from 7:24 pm to 7:34 pm.

6. 2019 Preliminary Budget Wrap-up

Mr. Robert Kehoe explains that further to Council's directive to reduce the tax increase to 3%, directors prepared options for Council’s consideration and refers to the document entitled "Service Level Option List".

Mr. Pierre Boucher reports on the meeting that was held with Mr. Leduc in regard to the public transit services, further to the budget deliberations of last week.

DIRECTIVE: THAT the public transit budget be reduced by $250,000 in order to reflect the discontinuance of the public transportation contract as of August 31,

2019 and that Council considers the adoption of a resolution to confirm this at the next regular meeting.

DIRECTIVE: THAT the budget be reduced by the amount of $119,600 thus, representing elimination of the Director of Finance and Economic Development position.

DIRECTIVE: THAT Community Services be mandated to negotiate a partnership agreement with the school board for their use of the Jean-Marc Lalonde Arena.

DIRECTIVE: THAT the snow bank removal budget be reduced by $50,000 representing a reduction of service level.

Mr. Julian Lenhart explains that according to our policy, snow clearing should be at a lower service level than what is being offered.

DIRECTIVE: THAT the snow clearing budget be reduced by $200,000 and that the snow clearing service level return to the level outlined in the existing policy.

DIRECTIVE: THAT the budget be reduced by $75,000 representing the reduction of one by-law officer position.

DIRECTIVE: THAT the proposed budget in the amount of $50,000 for the additional economic development reserve contribution be approved.

Mr. Wilson clarifies the standards to meet with the door-to-door Get out alive Program.

DIRECTIVE: THAT the door-to-door Get out alive Program be reduced by $35,000.

DIRECTIVE: THAT the proposed increase of 2% for daycare services fees be maintained.

DIRECTIVE: THAT the number of volunteer firefighters be maintained at 74.

Mr. Robert Kehoe explains that the proposed budget for pay-as-you-go corresponds to the necessary contributions to the reserves.

DIRECTIVE: THAT the proposed budget in the amount of $100,000 for the buildings pay-as-you-go be reduced to $50,000.

DIRECTIVE: THAT the proposed budget in the amount of $100,000 for the roads pay-as-you-go be reduced to $75,000.

RECOMMENDATION COW2019-13
Moved by Mario Zanth
Seconded by Samuel Cardarelli

THAT the special committee of the whole meeting be adjourned in order to discuss the following item, as stipulated in Section 239 of the *Municipal Act, 2001*, as amended:

6.1. CIH proposal

CARRIED

Members of Council move to the conference room adjacent to the Council Chambers at 9:23 p.m. and return to the Council Chambers at 9:40 p.m.

RECOMMENDATION COW2019-14
Moved by Mario Zanth
Seconded by Samuel Cardarelli

THAT the closed meeting be adjourned to resume the special committee of the whole meeting.

CARRIED

Mayor Desjardins informs the members of the public that Council discussed the CIH proposition in closed session and that the following recommendation be considered.

DIRECTIVE: THAT a $50,000 revenue be added to the building reserve (account 1-3-1220-0581) and that an expense of $50,000 be added to the contingency (account 1-4-1223-3998)

DIRECTIVE: THAT the Administration be mandated to prepare a report in regard to the costs of making employee benefits available to the members of Council.

RECOMMENDATION COW2019-15
Moved by André J. Lalonde
Seconded by Michel Levert

THAT Committee of the Whole recommends that the 2019 budget be approved with the proposed amendments, representing a 3.51% rate increase.

CARRIED

7. Adjournment

The Mayor adjourns the meeting at 9:43 pm.

_____ _____

Guy Desjardins, Mayor Maryse St-Pierre, Deputy Clerk

CORPORATION DE LA

CITÉ DE CLARENCE-ROCKLAND

PROCÈS-VERBAL RÉUNION SPÉCIALE BUDGET

le 22 janvier 2019
Salle du Conseil
415 rue Lemay Street, Clarence Creek, Ont.

PRÉSENT:	Guy Desjardins, maire
	Samuel Cardarelli, conseiller quartier 1
	Mario Zanth, conseiller du quartier 2
	Don Bouchard, conseiller quartier 4
	André J. Lalonde, conseiller du quartier 5
	Christian Simard, conseiller quartier 6
	Michel Levert, conseiller du quartier 7
	Diane Choinière, conseillère du quartier 8
	Monique Ouellet, greffière
	Maryse St-Pierre, greffière adjointe
ABSENT:	Carl Grimard, conseiller du quartier 3

1. Ouverture de la réunion

Le maire Desjardins ouvre la réunion à 18h.

2. Adoption de l'ordre du jour

RÉSOLUTION COW2019-12
Proposé par Mario Zanth
Appuyé par Don Bouchard

QUE l'ordre du jour soit adopté tel que présenté.

ADOPTÉE

3. Déclarations d'intérêts pécuniaires (aucune)

Demande de M. Yves Laviolette relativement à un problème d'érosion à sa propriété:

Yves Laviolette, 1058 Baseline, explique qu'il a un problème d'érosion sur sa propriété à cause du drainage de la Cité. Il demande à la Cité de reconsidérer sa décision relativement au budget en capital pour les travaux de fossé sur un terrain privé, lesquels ont été rejetés. Le maire Desjardins explique que s'il y a un surplus au budget, l'item peut être reconsidéré.

4. Présentation du budget préliminaire de 2019 de l'Administration

DIRECTIVE: QUE le compte pour les comptes recevables (1-3-0150-0551) soit augmenté de 5 000$.

DIRECTIVE: QUE le compte pour les changements de nom sur les comptes de taxes (1-3-0150-0556) soit augmenté à 20 000$.

DIRECTIVE: QUE le budget proposé de 30 000$ relativement à la traduction des tournages des réunions de conseil soit rejeté.

DIRECTIVE: QUE le compte pour la publicité (1-4-1123-3005) soit réduit à 0$.

DIRECTIVE: QUE le compte pour les comités (1-4-1123-3139) soit réduit à 0$.

Suite aux questions, Mme Monique Ouellet explique que le commissaire à l'intégrité est une exigence de la loi. Elle ajoute que le conseil a la possibilité de sélectionner le même commissaire que les CUPR s'il le désire.

DIRECTIVE: QUE le budget proposé de 10 000$ pour le commissaire à l'intégrité soit réduit à 5 000$.

DIRECTIVE: QUE le budget proposé de 500$ pour les repas (ressources humaines) soit rejeté.

DIRECTIVE: QUE le budget proposé de 10 000$ pour la formation de leadership et plan de relève soit approuvé.

DIRECTIVE: QUE le budget proposé de 2 500$ pour les fournitures de santé-sécurité soit approuvé.

5. Présentation du budget préliminaire de 2019 du Service des finances

DIRECTIVE: QUE le compte de revenus pour les certificats de taxes foncières soit réduit à 4 000$.

DIRECTIVE: QUE le budget proposé de 15 000 pour les vérificateurs soit réduit à 7 500$.

DIRECTIVE: QUE le budget proposé de 8 000$ pour les logiciels soit rejeté.

DIRECTIVE: QUE le budget proposé de 3 000$ pour le logiciel de réservation soit rejeté.

Augmentation proposée des frais d'usagers pour le gouvernement général et les finances

Suite aux discussions, la directive suivante est adoptée:

DIRECTIVE: QUE l'augmentation des frais usagers proposée pour le gouvernement général et les finances soit approuvée.

Budget en capital

DIRECTIVE: QUE le budget en capital proposé de 47 500$ pour le cycle de vie des technologies de l'information soit approuvé.

Suite aux questions, M. Julian Lenhart explique que le logiciel de gestion des actifs en place ne répond pas aux besoins de tous les départements, notamment pour les finances. M. Robert Kehoe explique que la recherche de ce logiciel pourra se faire par le biais de l'agent en chef des technologies de l'information.

DIRECTIVE: QUE le budget en capital proposé de 50 000$ pour l'examen de gestion des actifs de l'entreprise soit approuvé.

M. Frédéric Desnoyers explique le financement des divers projets en capital discutés lors des délibérations budgétaires.

DIRECTIVE: QUE le budget en capital proposé de $200,000 pour le stationnement de l'hôtel de ville de Rockland soit rejeté.

Suite aux questions, M. Brian Wilson explique que le conteneur à exercice de feu réel permettrait d'éviter les entraînements à Ottawa. Il ajoute que pour l'instant le projet ne peut se concrétiser vu que les casernes ne sont pas terminées.

DIRECTIVE: QUE le budget en capital proposé de 75 000$ pour le conteneur à exercice de feu réel soit différé au budget 2020.

DIRECTIVE: QUE le budget en capital proposé de 450 426$ pour le développement de la gare de Bourget soit maintenu.

Pause de 19h24 à 19h34.

6. Récapitulation du budget préliminaire de 2019

M. Robert Kehoe explique que suite à la directive du conseil de réduire l'augmentation du taux de taxe à 3%, les directeurs ont préparé des options pour la considération du conseil, et réfère au document intitulé "Service Level Option List".

M. Pierre Boucher fait un compte-rendu à propos d'une rencontre qui a eu lieu avec M. Leduc concernant la fourniture de service de transport en commun, suite aux délibérations budgétaires de la semaine dernière.

DIRECTIVE: QUE le budget pour les services de transport en commun soit réduit de 250 000$ dans le but de refléter la discontinuité du contrat de transport en commun à partir du 31 août 2019 et que le conseil considère l'adoption d'une résolution pour confirmer cette directive lors de la prochaine réunion régulière.

DIRECTIVE: QUE le budget soit réduit de 119 600$ afin de représenter l'élimination du poste de directeur des finances et du développement économique.

DIRECTIVE: QUE les services communautaires soient mandatés de négocier une entente de partenariat avec le conseil scolaire pour l'utilisation de l'aréna Jean-Marc Lalonde.

DIRECTIVE: QUE le budget pour l'enlèvement des bancs de neige soit réduit de 50 000$ représentant une réduction du niveau de service.

M. Julian Lenhart explique que selon notre politique, l'enlèvement de la neige devrait être à un niveau de service plus bas que ce qui est offert actuellement.

DIRECTIVE: QUE le budget d'enlèvement de la neige soit réduit de 200 000$; et que le niveau de service d'enlèvement de la neige retourne au niveau décrit dans la politique existante.

DIRECTIVE: QUE le budget soit réduit de 75 000$ représentant la réduction d'un poste d'officier de la règlementation.

DIRECTIVE: QUE le budget proposé de 50 000$ pour l'ajout d'une contribution à la réserve en développement économique soit approuvé.

M. Wilson apporte des précisions sur les normes à rencontrer relativement au programme de porte à porte "Get out alive".

DIRECTIVE: QUE le budget pour le programme de porte à porte "get out alive" soit réduit de 35 000$.

DIRECTIVE: QUE l'augmentation proposée de 2% pour les frais de garderies soit maintenue.

DIRECTIVE: QUE le nombre de pompiers volontaires soit maintenu à 74.

M. Robert Kehoe explique que les budgets proposés pour les paiements à usage correspondent aux contributions nécessaires à faire aux réserves.

DIRECTIVE: QUE le budget proposé de 100 000$ pour le paiement à l'usage des édifices soit réduit à 50 000$.

DIRECTIVE: QUE le budget proposé de 100 000$ pour le paiement à l'usage des chemins soit réduit à 75 000$.

RECOMMANDATION COW2019-13
Proposé par Mario Zanth
Appuyé par Samuel Cardarelli

QUE la réunion spéciale du comité plénier soit ajournée afin de tenir une session à huis clos pour discuter des sujets suivants, tel que stipulé à la section 239 de la *Loi sur les municipalités 2001*, tel que modifiée :

6.1. Proposition CIH

ADOPTÉE

Les membres du conseil se retirent dans la salle de conférence adjacente à la salle du conseil à 21h23 et retournent dans la salle du conseil à 21h40.

RECOMMANDATION COW2019-14
Proposé par Mario Zanth
Appuyé par Samuel Cardarelli

QUE la réunion à huis clos soit ajournée afin de retourner en réunion spéciale du comité plénier.

ADOPTÉE

Le maire Desjardins informe les membres du public que le conseil a discuté de du dossier de la proposition du CIH à huis clos et que la recommandation suivante doit être considérée.

DIRECTIVE: QU'un revenu de 50 000$ soit ajouté de la réserve des bâtiments (compte 1-3-1220-0581) et qu'une dépense de 50 000$ soit ajoutée à la contingence (compte 1-4-1223-3998).

DIRECTIVE: QUE l'administration soit mandatée de préparer un rapport relativement aux coûts pour rendre les bénéfices des employés accessibles aux membres du conseil.

RECOMMANDATION COW2019-15
Proposé par André J. Lalonde
Appuyé par Michel Levert

QUE le comité plénier recommande que le budget 2019 soit approuvé avec les amendements proposés, représentant une augmentation de 3.51% du taux de taxe.

7. Ajournement

Le maire lève l'assemblée à 21h43.

_____ _____

Guy Desjardins, maire Maryse St-Pierre, greffière adjointe

The Clarence-Rockland Public Library Board
Le Conseil d'administration de la Bibliothèque publique de Clarence-Rockland
2-1525, avenue du Parc, Rockland (Ontario) K4K 1C3 - (613) 446-5680

Meeting of the Clarence-Rockland Public Library Board
Réunion du Conseil d'administration de la Bibliothèque publique de Clarence-Rockland
at the Rockland Branch / à la succursale de Rockland

December 11, 2018 / Le 11 décembre 2018
Minutes / Procès-verbal

Present:

Sylvie Archambault: President - Community Rep / Présidente - Rep communautaire
Don Bouchard: Councillor, Ward 4 / Conseiller municipal, Quartier 4
Diane Choinière: Councillor, Ward 8 /Conseillère municipale, Quartier 8
Martine Moreau: Community Representative / Représentante communautaire
Sarma Merdian: Community Representative / Représentante communautaire
Michael Moskau: Community Representative / Représentant communautaire
Arthur Voth: Community Representative / Représentant communautaire
Catherina Rouse: Chief Executive Officer / Directrice Générale
Sonia Lavoie: Secretary / Secrétaire

Absent:

1. Call to Order

Proposition 2018-12.1
The meeting was called to order at 7:03 pm.

Moved by: S. Archambault
Seconded by: M. Moskau
Carried: Unanimously

2. Approval of the Agenda

Proposition 2018-12.2
It is proposed:
THAT the agenda be accepted as is.

Moved by: M. Moskau
Seconded by: M. Moreau
Carried: Unanimously

1. Ouverture de l'assemblée

Résolution 2018-12.1
La séance est ouverte à 19h03.

Proposée par : S. Archambault
Appuyée par : M. Moskau
Acceptée à: l'unanimité

2. Approbation de l'ordre du jour

Résolution 2018-12.2
Il est proposé :
QUE l'ordre du jour soit accepté tel quel.

Proposée par : M. Moskau
Appuyée par : M. Moreau
Acceptée à: l'unanimité

3. Declaration of conflicts of Interest

M. Moskau will not vote on CEO performance appraisal and raise because he is related to C. Rouse.

4. Minutes of the October 17, 2018 Meeting

Proposition 2018-12.3
It is proposed:
THAT the minutes of the last Board meeting be accepted as is.

Moved by:	S. Archambault
Seconded by:	D. Choinière
Carried:	Unanimously

5. Monthly Statistics

The monthly statistics were reviewed and added to the meeting documents. C. Rouse mentioned that overall, we will finish the year up in most areas. She is attributing this success to Rockland's population growth and the fact that the city has increased our funding which allows us to provide an updated collection and better services. Of note:

a. On 12 December 2018, author Annie Bacon will be at the Rockland branch to present her junior fiction books to a hundred kids from local schools.

b. Little Free Libraries: C. Rouse mentioned that it's going well but it is difficult to offer statistics on the usage. She said that she continues to replenish them as required.

c. Baby Tales program started but not many have signed up yet.

6. Financial Report and Budget

The financial report and budget were reviewed and added to the meeting documents. Also:

a. C. Rouse mentioned that overall, we are on track to finish the year with a $3K surplus. It will either be rolled into next year's budget or used to pay down the CoLab loan to the City.

3. Déclaration de conflits d'intérêts

M. Moskau ne votera pas sur l'évaluation de la performance et l'augmentation de paye de la DG parce qu'il est apparenté à C. Rouse.

4. Procès-verbal de la réunion du 17 octobre 2018

Résolution 2018-12.3
Il est proposé :
QUE le procès-verbal de la dernière réunion du Conseil soit accepté tel quel.

Proposée par :	S. Archambault
Appuyée par :	D. Choinière
Acceptée à:	l'unanimité

5. Statistiques mensuelles

Les statistiques mensuelles ont été examinées et ajoutées aux documents de la réunion. C. Rouse mentionne que, dans l'ensemble, nous terminerons l'année à la hausse dans la plupart des secteurs. Elle attribue ce succès à la croissance démographique de Rockland et au fait que la Ville a augmenté notre financement, ce qui nous permet d'offrir une collection à jour et de meilleurs services. À noter :

a. Le 12 décembre 2018, l'auteure Annie Bacon sera à la succursale de Rockland pour présenter ses livres de fiction junior à une centaine d'enfants des écoles du quartier.
b. Petites bibliothèques gratuites : C. Rouse mentionne que tout se passe bien, mais qu'il est difficile de présenter des statistiques sur leur utilisation. Elle a dit qu'elle continue de les réapprovisionner au besoin.
c. Le programme Baby Tales a commencé, mais peu y ont encore adhéré.

6. Rapport financier et budget

Le rapport financier et le budget ont été examinés et ajoutés aux documents de la réunion. De plus :

a. C. Rouse mentionne que, dans l'ensemble, nous sommes sur la bonne voie pour terminer l'année avec un surplus de 3 000 $. Il sera intégré au budget de l'an prochain ou

b. C. Rouse gave a presentation of the new CoLab audio-visual equipment. Once finalised, C. Rouse will send everyone the report on the fundraising and costs. CoLab's sponsorship funding and rights were discussed.
c. S. Lavoie showed how she tracks hydro and gas bills. So far, we are trending 6-7% lower than last year.

7. Other Business

Policy FN-01: Mission: Following the adoption of the mission in French last month, C. Rouse presented a bilingual policy introducing the Library's Mission.

Proposition 2018-12.4
It is proposed:
THAT policy FN-01 be accepted as presented.

Moved by: D. Choinière
Seconded by: S. Archambault
Carried: Unanimously

8. CEO's Report

a. New City council presentation: The Library presentation went well.

b. CEO Performance appraisal and raise: S. Archambault reviewed C. Rouse's performance appraisal with the Board of Directors.

Proposition 2018-12.5
It is proposed:
THAT C. Rouse be given a raise to BP1 level 5, effective November 18, 2018.

Moved by: D. Choinière
Seconded by: S. Merdian
Carried: Unanimously

c. Collective Agreement: Discussion behind closed doors took place.
d. Art in Your Wallet: C. Rouse presented the book Art in Your Wallet from

utilisé pour rembourser le prêt du collab à la Ville.
b. C. Rouse a présenté le nouvel équipement audiovisuel du collab au Conseil. Une fois finalisé, C. Rouse enverra à tous le rapport sur la collecte de fonds et les coûts. Le financement et les droits de collab en matière de parrainage ont été discutés.

c. S. Lavoie a montré comment elle fait le suivi des factures d'électricité et de gaz. Jusqu'à présent, nous sommes en baisse de 6-7% par rapport à l'année dernière.

7. Varia

Politique FN-01 : Mission : Suite à l'adoption de la mission en français le mois dernier, C. Rouse a présenté une politique bilingue introduisant la mission de la bibliothèque.

Proposition 2018-12.4
Il est proposé :
QUE la politique FN-01 soit acceptée tel que présentée.

Proposé par : D. Choinière
Appuyée par : S. Archambault
Adoptée : À l'unanimité

8. Rapport de la Directrice générale

a. Présentation du nouveau Conseil municipal : La présentation de la bibliothèque s'est bien déroulée.
b. Évaluation du rendement et augmentation de la directrice générale : S. Archambault a passé en revue l'évaluation du rendement de C. Rouse avec le Conseil d'administration.

Proposition 2018-12.5
Il est proposé :
QUE C. Rouse reçoive une augmentation à BP1 niveau 5, à compter du 18 novembre 2018

Proposé par : D. Choinière
Appuyée par : S. Merdian
Adoptée : À l'unanimité

c. Convention collective : Une discussion à huis clos a eu lieu.
d. Art in Your Wallet : C. Rouse a présenté le livre Art in Your Wallet de FOPL qui partage

FOPL which shares Ontario Libraries stories and their library card images.

e. Building Issues: C. Rouse mentions that we are experiencing many issues such as temperature control (too cold or too hot), yellow hot water in the kitchen, no water in the staff bathroom and damaged ceiling due to water infiltration. She is working with the City and the YMCA to fix the problems as they arise.

f. Board Application: The City advised that there are 8 applicants to fill our 5 positions. The City's decision will be communicated next week.

g. The new Board meeting dates for 2019 have been agreed as:

1) January 15, 2019 (Bourget)
2) February 19, 2019
3) March 19, 2019
4) April 16, 2019
5) May 11, 2019
6) June 18, 2019
7) September 17, 2019 (Bourget)
8) October 8, 2019
9) November 19, 2019
10) December 10, 2019

9. Adjournment

The next meeting of the Library Board is scheduled for 7 pm on January 15, 2019 at the Bourget branch.

les histoires des bibliothèques de l'Ontario et les images de leurs cartes de bibliothèque.

e. Problèmes de bâtiment : C. Rouse mentionne que nous éprouvons de nombreux problèmes tels que le contrôle de la température (trop froid ou trop chaud), l'eau chaude jaune dans la cuisine, l'absence d'eau dans la salle de bain du personnel et le plafond endommagé par infiltration d'eau. Elle travaille avec la Ville et le YMCA pour régler les problèmes à mesure qu'ils surviennent.

f. Applications au Conseil d'administration : La Ville nous a informés qu'il y a 8 candidats pour combler nos 5 postes. La décision de la Ville sera communiquée la semaine prochaine.

g. Les nouvelles dates de réunion du Conseil pour 2019 ont été convenues comme suit :

1) 15 janvier 2019 (Bourget)
2) 19 février 2019
3) Le 19 mars 2019
4) 16 avril 2019
5) 11 mai 2019
6) 18 juin 2019
7) 17 septembre 2019 (Bourget)
8) 8 octobre 2019
9) 19 novembre 2019
10) 10 décembre 2019

9. Ajournement

La prochaine réunion du Conseil d'administration de la Bibliothèque aura lieu à 19h00 le 15 janvier 2019 à la succursale de Rockland.

Proposition 2018-12.6
It is proposed:
THAT the meeting be adjourned at 8:25 pm.

Moved by: M. Moskau
Seconded by: A. Voth
Carried: Unanimously

Résolution 2018-12.6
Il est proposé :
QUE la séance soit levée à 20h25.

Proposée par : M. Moskau
Appuyée par : A. Voth
Acceptée à: l'unanimité

Approval of these minutes:

Board President/ Date
Présidente du Conseil d'administration

Approbation du présent procès-verbal :

CEO/ Date
Directrice générale

Clarence-Rockland

RAPPORT N° AMÉ-19-14-R

Date	21/01/2019
Soumis par	Marie-Eve Bélanger
Objet	Modifications au balcon du presbytère de la Paroisse Ste-Trinité
# du dossier	2178-2180 Laurier

1) **NATURE / OBJECTIF :**
La nature de ce rapport est d'approuver les rénovations nécessaires au balcon du presbytère situé au 2178-2180 rue Laurier à Rockland.

2) **DIRECTIVE/POLITIQUE ANTÉCÉDENTE :**
N/A

3) **RECOMMANDATION DU SERVICE:**
ATTENDU QUE le balcon situé au presbytère de la Paroisse Ste-Trinité (2178-2180 rue Laurier) est en très mauvais état et doit être reconstruit; et

ATTENDU QUE le presbytère est désigné comme ayant une valeur sur le Plan du patrimoine culturel; et

ATTENDU QUE la reconstruction du balcon du presbytère, tel qu'il est bâti présentement, s'avère trop couteuse.

QUE le comité plénier recommande au conseil d'approuver les modifications au balcon du presbytère, tel que présenté par les plans de Michanie Construction datés du 31 aout 2018.

WHEREAS the balcony located at the Paroisse Ste-Trinité Presbytery (2178-2180 Laurier Street) is in very bad shape and must be reconstructed; and

WHEREAS the Presbytery is designated as being of cultural heritage value; and

WHEREAS the reconstruction of the Presbytery's balcony, as it is constructed today, would be too costly;

THAT the Committee of the Whole recommends that Council approve the alterations to the presbytery balcony, as described on the plans prepared by Michanie Construction dated August 31, 2018.

4) **HISTORIQUE :**

Le règlement 2008-58 a été approuvé en 2008 afin de cité l'église et le presbytère de la Paroisse Ste-Trinité de Rockland comme ayant une valeur patrimoniale. Le balcon, son belvédère et ses garde-corps en béton décoratifs font partit des principaux attributs du presbytère.

5) **DISCUSSION :**

L'article 33 de la Loi sur le patrimoine de l'Ontario stipule que nul propriétaire d'un bien désigné au termes de l'article 29 ne doit transformer un bien si celle-ci aura une incidence sur les attributs patrimoniaux du bien, énoncés dans la description des attributs patrimoniaux, sauf s'il en fait la demande au conseil et reçoit un consentement écrit pour procéder à la transformation.

En janvier 2017, le comité paroissial a commencé les démarches afin de refaire les balcons du presbytère, soit en béton. La facture s'élevait à plus de 400 000,00 $ pour refaire les balcons ce qui était beaucoup trop élevé pour la Paroisse.

En mai 2018, Michanie Construction a été engagé par la Paroisse afin d'évaluer et conceptualisé le projet de réparation des balcons. Lors de l'investigation, Michanie a découvert que la structure est érodée et n'est plus bien ancré avec l'édifice ce qui rend l'accès non-sécuritaire pour les locataires. La façade de l'édifice supporte difficilement le poids de la structure existante. Il est important d'agir rapidement pour des raisons de santé et sécurité.

Puisque c'est un bâtiment patrimonial, il est important de garder l'aspect visuel identiques ou similaires.

Michanie Construction propose l'utilisation de bois pour refaire les plancher, recouvert d'une membrane qui aura l'aspect du ciment. Ceci sera beaucoup plus léger pour le support de la structure. Il propose également de remplacer les rampes et les balustrades de béton par du bois peinturer blanc. Il recommande également d'installer des colonnes en bois structural qui seront soit peinturer ou recouvertes en aluminium.

En remplaçant les balcons et les balustrades avec du bois, il sera moins couteux et plus viable. C'est également une question de santé et sécurité.

Il est important de mentionner que la hauteur des balustrades du balcon est présentement de 29 pouces. Le Code du bâtiment requiert 42 pouces. Puisque le bâtiment est existant, le Code du bâtiment permet une reconstruction avec la même hauteur existante des balustrades. Le comité paroissial, de son côté aimerait aller de l'avant avec des balustrades de 42 pouces pour fins de sécurité de ses locataires. Puisque le presbytère est à une certaine distance de la rue, la différence de hauteur des balustrades sera minime.

6) **CONSULTATION :**

Suite à quelques rencontres avec des gens du comité paroissial ainsi qu'avec Michanie Construction, il fut établi que les balustrades en bois ainsi que les colonnes auront le même aspect que ceux qui sont existants. Le but est de garder le cachet du bâtiment et celui-ci sera conservé.

Le comité consultatif a été consulté et a vérifié les plans soumis des rénovations. Des membres du comité ont également rencontré un représentant du presbytère ainsi que Michanie Construction qui ont fait le design du nouveau balcon.

7) **RECOMMANDATION OU COMMENTAIRES DU COMITÉ :**
Le comité consultatif du patrimoine est d'accord avec les plans et recommandations de Michanie Construction.

8) **IMPACT FINANCIER (monétaire/matériaux/etc.):**
N/A

9) **IMPLICATIONS LÉGALES :**
N/A

10) **GESTION DU RISQUE (RISK MANAGEMENT) :**
L'approbation de balustrade plus haute réduira le risque d'accident.

11) **IMPLICATIONS STRATÉGIQUES :**
N/A

12) **DOCUMENTS D'APPUI:**
Règlement 2008-58
Plans de rénovations

2

RÈGLEMENT NO. 2008-58

Citant deux biens patrimoniaux
2178, rue Laurier
2184, rue Laurier

Corporation de la Cité de Clarence-Rockland

rédigé par

Cité de Clarence-Rockland
1560, rue Laurier
Rockland (Ontario)
K4K 1P7
(613) 446-6022

BY-LAW NO. 2008-58

Designate two heritage properties
2178 Laurier Street
2184 Laurier Street

Corporation of the City of Clarence-Rockland

prepared by

City of Clarence-Rockland
1560 Laurier Street
Rockland, Ontario
K4K 1P7
(613) 446-6022

CORPORATION
DE LA CITÉ DE / OF THE CITY OF
CLARENCE-ROCKLAND
VRAIE COPIE CONFORME DE
CERTIFIED TO BE TRUE COPY OF:
By-law 2008-58
Signature
GREFFIÈRE ADJOINTE / DEPUTY CLERK

LA CORPORATION DE LA CITÉ DE CLARENCE-ROCKLAND

RÈGLEMENT NO. 2008-58

UN RÈGLEMENT POUR CITER LES PROPRIÉTÉS LOCALISÉES AU 2178 ET 2184, RUE LAURIER COMME PRÉSENTANT UNE VALEUR OU UN CARACTÈRE SUR LE PLAN DU PATRIMOINE CULTUREL;

ATTENDU QUE l'article 29 de la *Loi sur le patrimoine de l'Ontario* prévoit que le Conseil de la municipalité peut, au moyen d'un règlement, désigner un bien situé dans la municipalité comme ayant une valeur ou un caractère sur le plan du patrimoine culturel;

ATTENDU QUE le Conseil de la Corporation de la Cité de Clarence-Rockland a signifié au propriétaire des biens et à la Fiducie du patrimoine ontarien l'avis d'intention de désigner le bien susmentionné et a publié ce même avis dans un journal généralement lu dans la municipalité;

ET ATTENDU QU'aucun avis d'opposition concernant les désignations proposées n'a été signifié au greffier de la municipalité;

IL EST RÉSOLU QUE le Conseil de la Corporation de la Cité de Clarence-Rockland donne force de loi à ce qui suit:

Article 1 : Les Règlements numéro 2006-115 et 2006-116 sont par la présente abrogés.

Article 2 : Les propriétés situées du côté nord de la rue Laurier, décrites comme étant LT1 E/S Marston St, 2 E/S Marston St PL A. Bell 1908 Rockland; LT 16 N/S Main St. in TWP LT 27 PL A. Bell 1908 Rockland; LT 17 N/S Main St. in TWP LT 27 PL A. Bell 1908 Rockland; LT 18 N/S Main St. in TWP LT 28 PL A. Bell 1908 anciennement dans la ville de Rockland, maintenant dans la Cité de Clarence-Rockland et identifiées en noir sur le plan ici-bas et faisant partie du présent règlement, seront les propriétés concernées par le présent règlement.

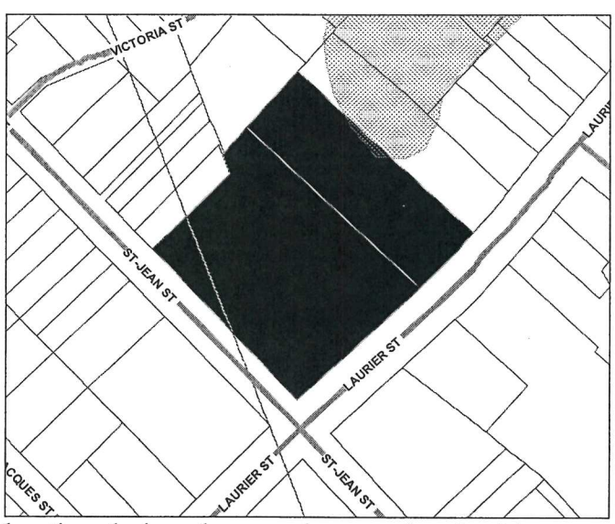

Article 3 : La déclaration de la valeur ou du caractère des biens sur le plan du patrimoine culturel et la description des attributs patrimoniaux sont identifiées comme suit :

3.1 **<u>Description du bien</u>** – Presbytère de la paroisse Très-Sainte-Trinité, 2178, rue Laurier
Le presbytère de la paroisse Très-Sainte-Trinité est situé du côté nord de la rue Laurier.

<u>Déclaration de la valeur ou du caractère sur le plan du patrimoine culturel</u>
Simultanément, la construction du presbytère et de l'église a été amorcée en 1917 sous la supervision du curé Hudon. Ce bâtiment occupe un site choisi au centre-ville de Rockland.

Le presbytère coiffé d'une toiture à l'allure mansardée est un bel exemple de l'architecture des années 1920. Tout comme l'église, les murs

extérieurs sont en pierres grises tirées de la carrière de Rockland. À l'intérieur, les murs porteurs et les planchers sont en béton armé (15 cm d'épaisseur). Les parquets sont en céramique et datent du temps de la construction. Avec son belvédère, ses grands balcons aux deux étages et sa tour ornée d'un mât, le presbytère prend beaucoup plus l'allure d'un château français qu'un simple manoir de petit seigneur.

La décoration intérieure a été confiée à des artisans de grande réputation, tels que T.-X. Renaud et Georges Delfosse, peintres – décorateurs; Carli – Petrucci, statutaires; Joseph Villeneuve, boiseries et meubles, et Hamon et Hess, tuiles et marbres. Cet édifice et son contenu, sont considérés comme des joyaux du patrimoine religieux de la municipalité.

Déclaration des attributs patrimoniaux

Les principaux attributs du presbytère qui témoignent de sa valeur en tant que lien important avec l'histoire de la Cité de Clarence-Rockland comprennent :

- Les murs extérieurs de pierres grises provenant de la carrière de Rockland;
- Son toit mansarde, la tourelle, ses larges balcons, son belvédère et leurs garde-corps en béton décoratif;
- Son emplacement et ses dimensions.

Les principaux attributs du presbytère qui témoignent de sa valeur en tant que préservation de décoration intérieure comprennent :

- Sculptures sur bois;
- Les boiseries impressionnantes;
- Le verre gravé;
- Tables et buffet;
- Vaisselier;
- Horloge.

3.2 **Description du bien** – Église Très-Sainte-Trinité, 2184, rue Laurier

L'Église Très-Sainte-Trinité est située du côté nord de la rue Laurier et du côté est de la rue Saint-Jean.

Déclaration de la valeur ou du caractère sur le plan du patrimoine culturel

L'église est de style roman. Elle occupe un site choisi au centre-ville de Rockland. Les murs extérieurs de ce bâtiment sont de pierres grises provenant de la carrière de Rockland. Son clocher abrite 5 cloches (do, fa, sol, la, do) qui proviennent des fonderies Paccard à Annecy-Le-Vieux dans la Haute Savoie, en France.

Le regretté curé Hudon et la communauté reconstruisirent l'église en 1917. Doté d'un orgue Casavant et d'une acoustique hors pair, l'église Très-Sainte-Trinité se prête bien à des concerts de musique et de chant.

La décoration intérieure a été confiée à des artisans de grande réputation, tels que T.-X. Renaud et Georges Delfosse, peintres – décorateurs; Carli – Petrucci, statutaires; Joseph Villeneuve, boiseries et meubles, et Hamon et Hess, tuiles et marbres. Cet édifice et son contenu, sont considérés comme des joyaux du patrimoine religieux de la municipalité.

Déclaration des attributs patrimoniaux

Les principaux attributs de l'église qui témoignent de sa valeur en tant que lien important avec l'histoire de la Cité de Clarence-Rockland comprennent :

- Les murs extérieurs de pierres grises provenant de la carrière de Rockland;
- Son clocher;
- Son emplacement et ses dimensions.

Les principaux attributs de l'église qui témoignent de sa valeur en tant que préservation de décoration intérieure comprennent :

- Sculptures sur bois;
- Meubles;
- Autels centraux dans le chœur;
- Autels latéraux;
- Confessionnaux;
- Orgues;
- Chaire et abat-voix;
- Table de communion;
- Tables et consoles;
- Crucifix et ornements;
- Statues;
- Chemin de croix;
- Fonts baptismaux;
- Stalles;
- Vitraux.

Article 4 : Le conseiller légal de la Cité est par la présente autorisé à enregistrer une copie de ce règlement sur le registre des titres du Bureau d'enregistrement local.

Article 5 : Le greffier est par la présente autorisé à s'assurer qu'une copie du règlement, accompagnée d'une déclaration qui explique la valeur ou le caractère du bien sur le plan du patrimoine culturel et d'une description de ses attributs patrimoniaux soient signifiées au propriétaire du bien et à la Fiducie du patrimoine ontarien, ainsi que de publier un avis d'adoption du règlement dans le même journal généralement lu dans la municipalité.

Article 6 : Ce règlement entrera en vigueur à sa date d'adoption.

FAIT ET ADOPTÉ EN RÉUNION PUBLIQUE, CE 14IÈME JOUR D'AVRIL, 2008.

(SIGNÉ) Richard Lalonde
MAIRE

(SIGNÉ) Daniel Gatien
GREFFIER

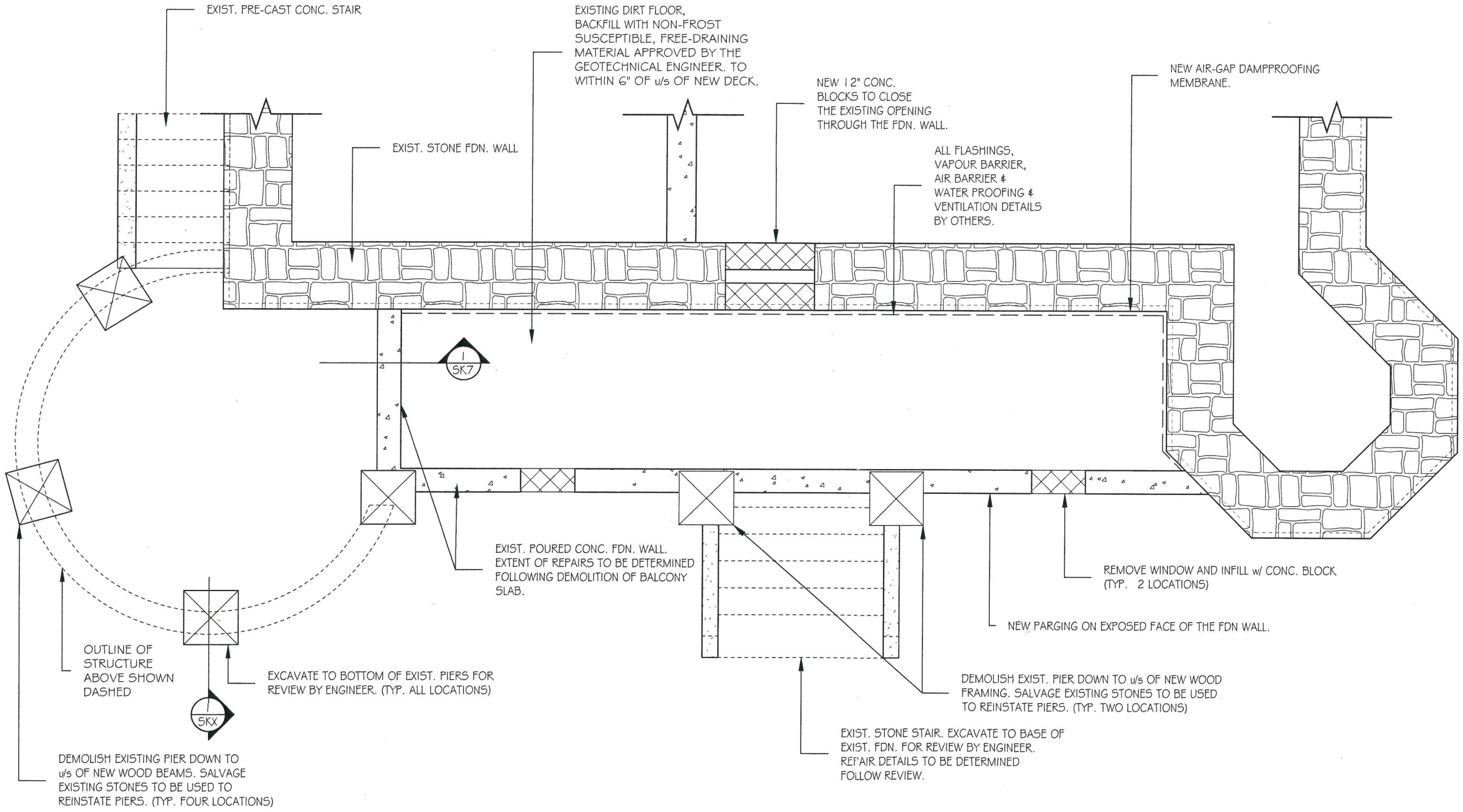

1 / SK1 FDN. PLAN SCALE 1/4"=1'-0"

GASCON ENGINEERING & STRUCTURAL DESIGN INC.

TEL: 343.999.4373
NOEL.GASCON@ROGERS.COM
WWW.GASCONESD.COM

CLIENT
Michanie Construction

LICENSED PROFESSIONAL ENGINEER
N.C.A. GASCON
90546920
1/10/2018
PROVINCE OF ONTARIO

NO	REVISION	DATE
1	ISSUED FOR REVIEW	8/31/2018
2	ISSUED FOR PERMIT	1/10/2018

PROJECT / LOCATION
BALCONY SLAB REPLACEMENT

2178 Laurier Ave
ROCKLAND, ONTARIO

DRAWING
FOUNDATION PLAN

DESIGNED BY	APPROVED BY
Noel Gascon	NG
DRAWN BY	SCALE
EA	AS NOTED
DATE	
31-AUG-2018	
PROJECT NO.	SHEET NO.
2018-070	SK1

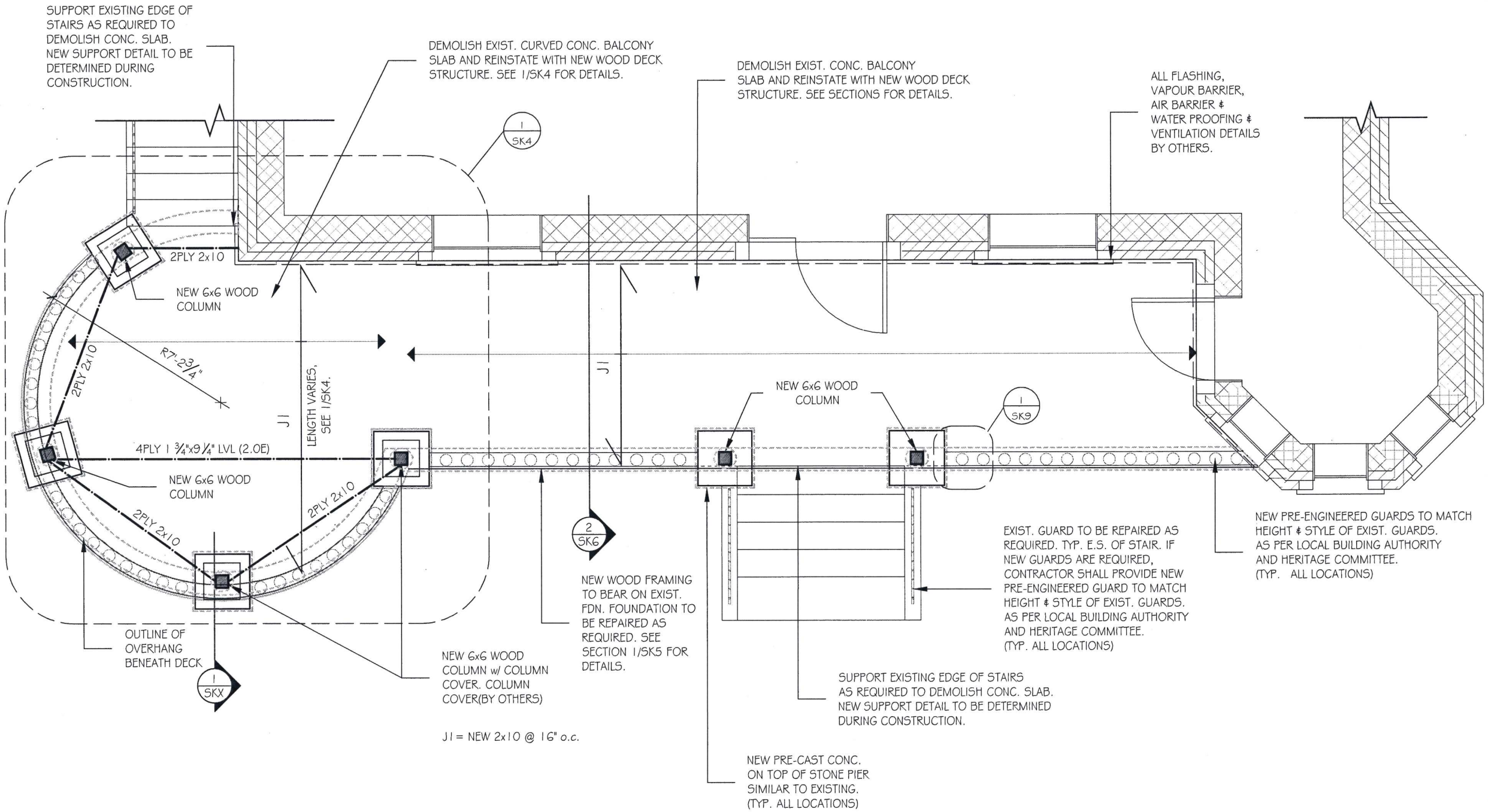

1 / SK2 GROUND FLOOR PLAN SCALE 1/4"=1'-0"

100

GASCON ENGINEERING & STRUCTURAL DESIGN INC.
TEL: 343.999.4373
NOEL.GASCON@ROGERS.COM
WWW.GASCONESD.COM

CLIENT
Michanie Construction

LICENSED PROFESSIONAL ENGINEER
N.C.A. GASCON
90546920
1/10/2018
PROVINCE OF ONTARIO

NO	REVISION	DATE
1	ISSUED FOR REVIEW	8/31/2018
2	ISSUED FOR PERMIT	1/10/2018

PROJECT / LOCATION
BALCONY SLAB REPLACEMENT

2178 Laurier Ave
ROCKLAND, ONTARIO

DRAWING
GROUND FLOOR PLAN

DESIGNED BY	APPROVED BY
Noel Gascon	NG
DRAWN BY	SCALE
EA	AS NOTED
DATE	
31-AUG-2018	
PROJECT NO.	SHEET NO.
2018-070	SK2

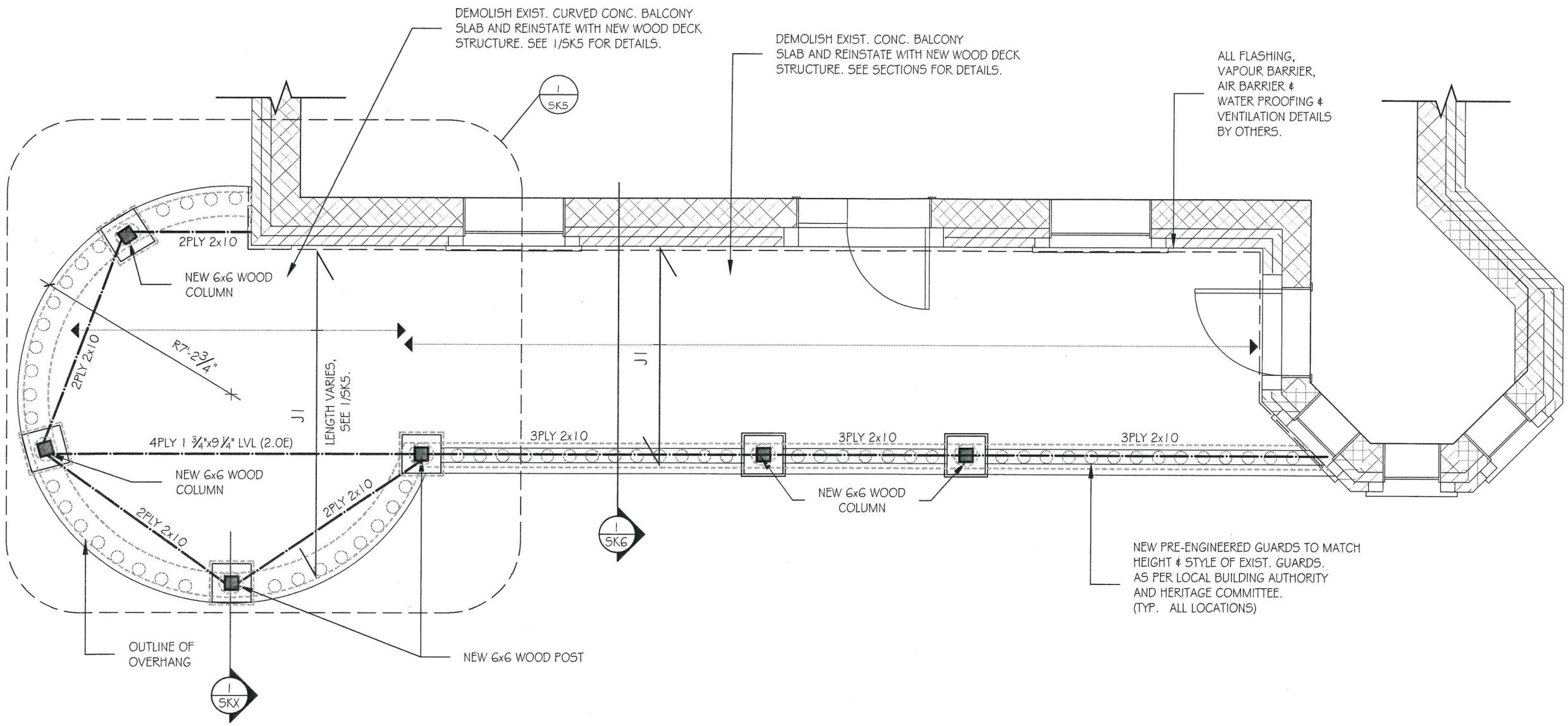

J1 = NEW 2x10 @ 16" o.c.

1 SK3 SECOND FLOOR PLAN SCALE 1/4"=1'-0"

GASCON ENGINEERING & STRUCTURAL DESIGN INC.

TEL: 343.999.4373
NOEL.GASCON@ROGERS.COM
WWW.GASCONESD.COM

CLIENT
Michanie Construction

LICENSED PROFESSIONAL ENGINEER
N.C.A. GASCON
90546920
1/10/2018
PROVINCE OF ONTARIO

NO	REVISION	DATE
1	ISSUED FOR REVIEW	8/31/2018
2	ISSUED FOR PERMIT	1/10/2018

PROJECT / LOCATION
BALCONY SLAB REPLACEMENT

2178 Laurier Ave
ROCKLAND, ONTARIO

DRAWING
SECOND FLOOR PLAN

DESIGNED BY	APPROVED BY
Noel Gascon	NG
DRAWN BY	SCALE
EA	AS NOTED
DATE	
31-AUG-2018	
PROJECT NO.	SHEET NO.
2018-070	SK3

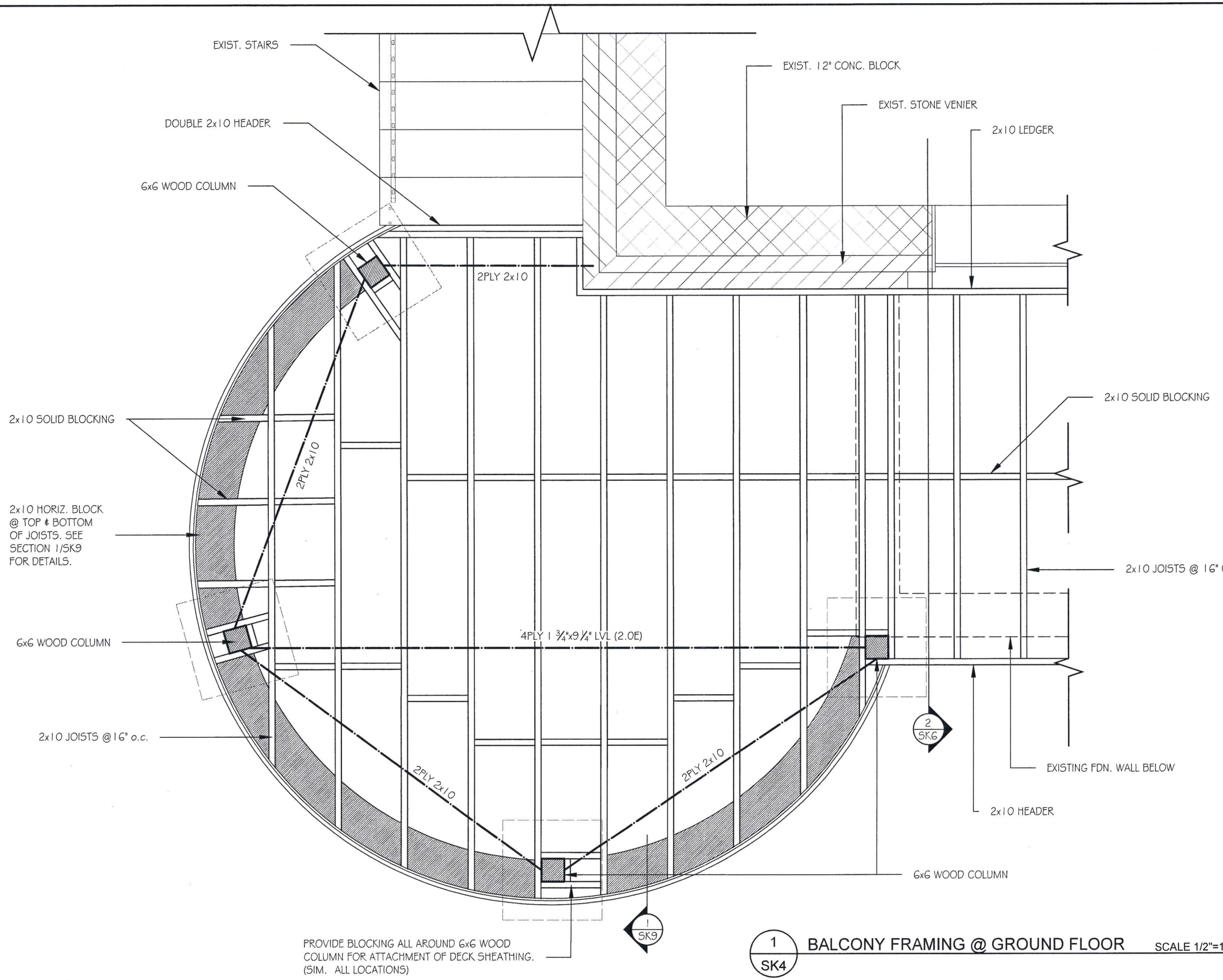

1 SK4 BALCONY FRAMING @ GROUND FLOOR SCALE 1/2"=1'-0"

GASCON ENGINEERING & STRUCTURAL DESIGN INC.

TEL: 343.999.4373
NOEL.GASCON@ROGERS.COM
WWW.GASCONESD.COM

CLIENT
Michanie Construction

LICENSED PROFESSIONAL ENGINEER
N.C.A. GASCON
90546920
1/10/2018
PROVINCE OF ONTARIO

NO	REVISION	DATE
1	ISSUED FOR REVIEW	8/31/2018
2	ISSUED FOR PERMIT	1/10/2018

PROJECT / LOCATION
BALCONY SLAB REPLACEMENT

2178 Laurier Ave
ROCKLAND, ONTARIO

DRAWING
BALCONY FRAMING@ GROUND FLOOR

DESIGNED BY	APPROVED BY
Noel Gascon	NG
DRAWN BY	SCALE
EA	1/2"=1'-0"
DATE	
31-AUG-2018	
PROJECT NO.	SHEET NO.
2018-070	SK4

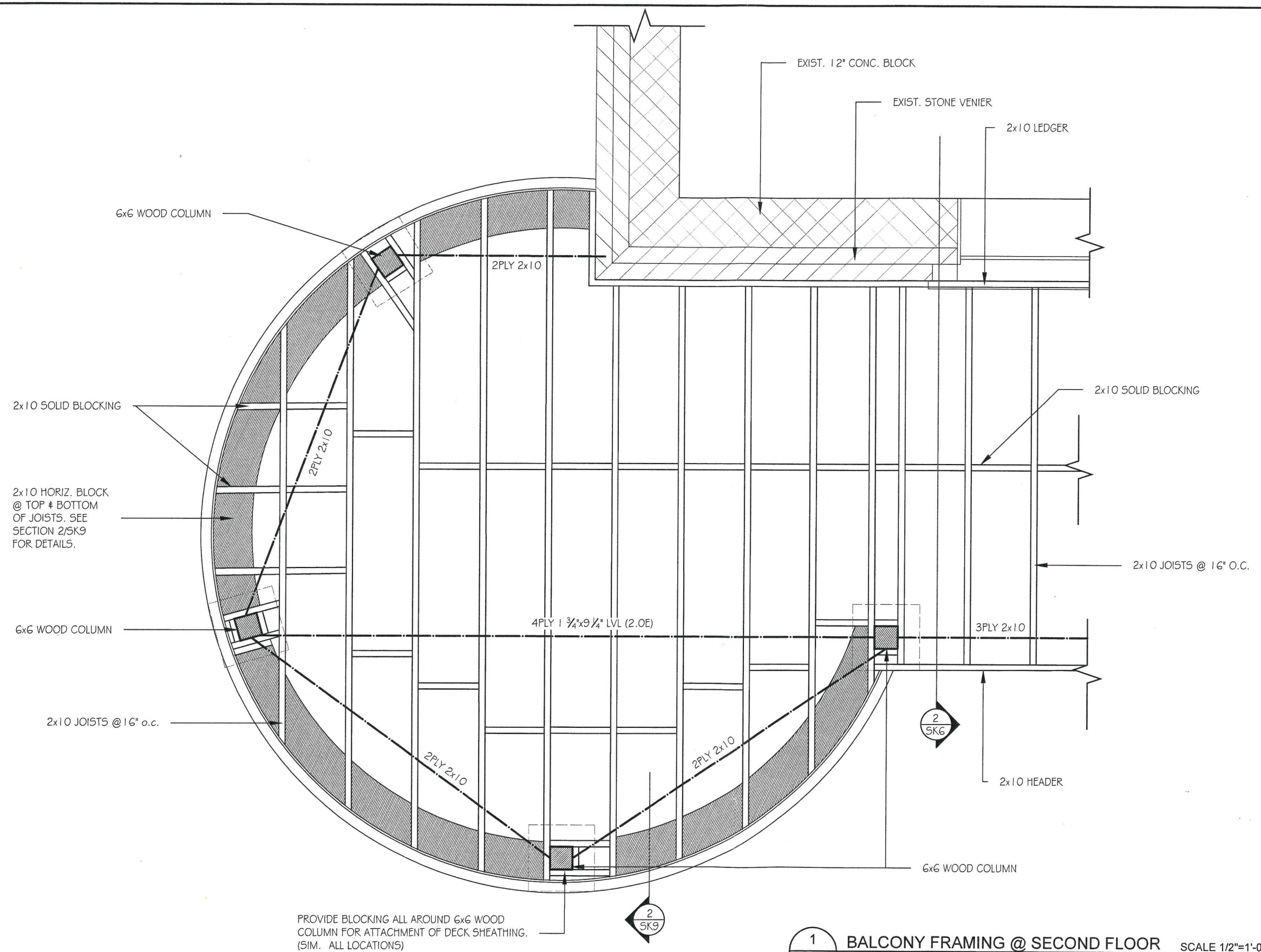

1 SK5 BALCONY FRAMING @ SECOND FLOOR SCALE 1/2"=1'-0"

103

GASCON ENGINEERING & STRUCTURAL DESIGN INC.

TEL: 343.999.4373
NOEL.GASCON@ROGERS.COM
WWW.GASCONESD.COM

CLIENT
Michanie Construction

LICENSED PROFESSIONAL ENGINEER
N.C.A. GASCON
90546920
1/10/2018
PROVINCE OF ONTARIO

NO	REVISION	DATE
1	ISSUED FOR REVIEW	8/31/2018
2	ISSUED FOR PERMIT	1/10/2018

PROJECT / LOCATION
BALCONY SLAB REPLACEMENT

2178 Laurier Ave
ROCKLAND, ONTARIO

DRAWING
BALCONY FRAMING@ 2ND FLOOR

DESIGNED BY	APPROVED BY
Noel Gascon	NG
DRAWN BY	SCALE
EA	1/2"=1'-0"
DATE	
31-AUG-2018	
PROJECT NO.	SHEET NO.
2018-070	SK5

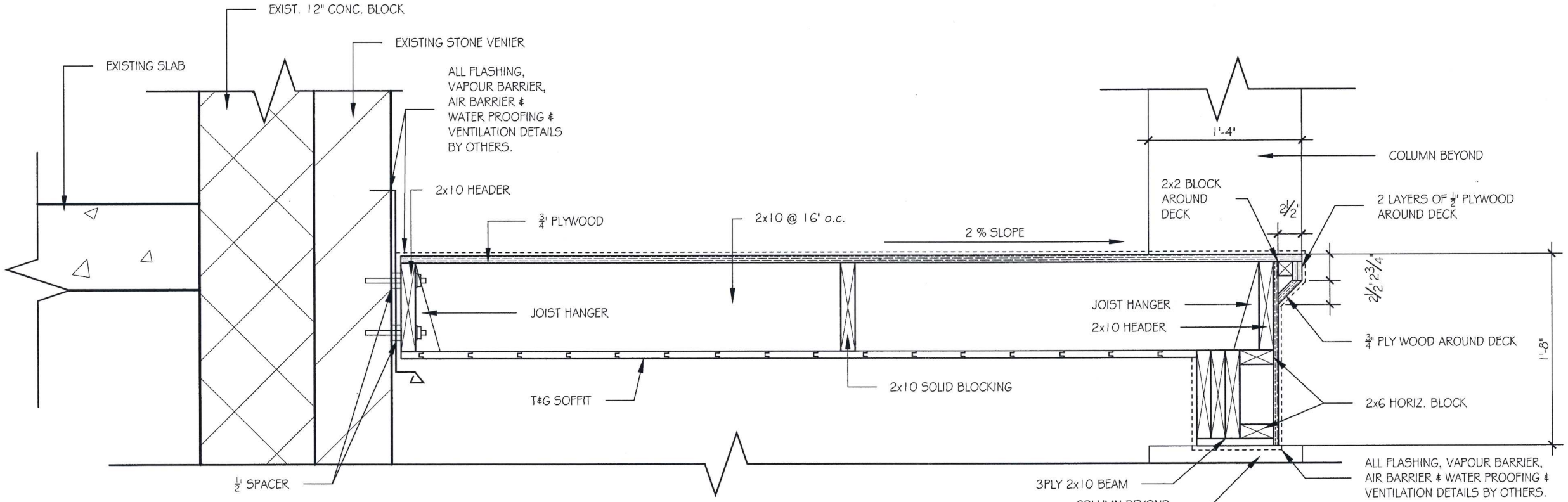

1 / SK6 SECTION@SECOND FLOOR SCALE 1"=1'-0"

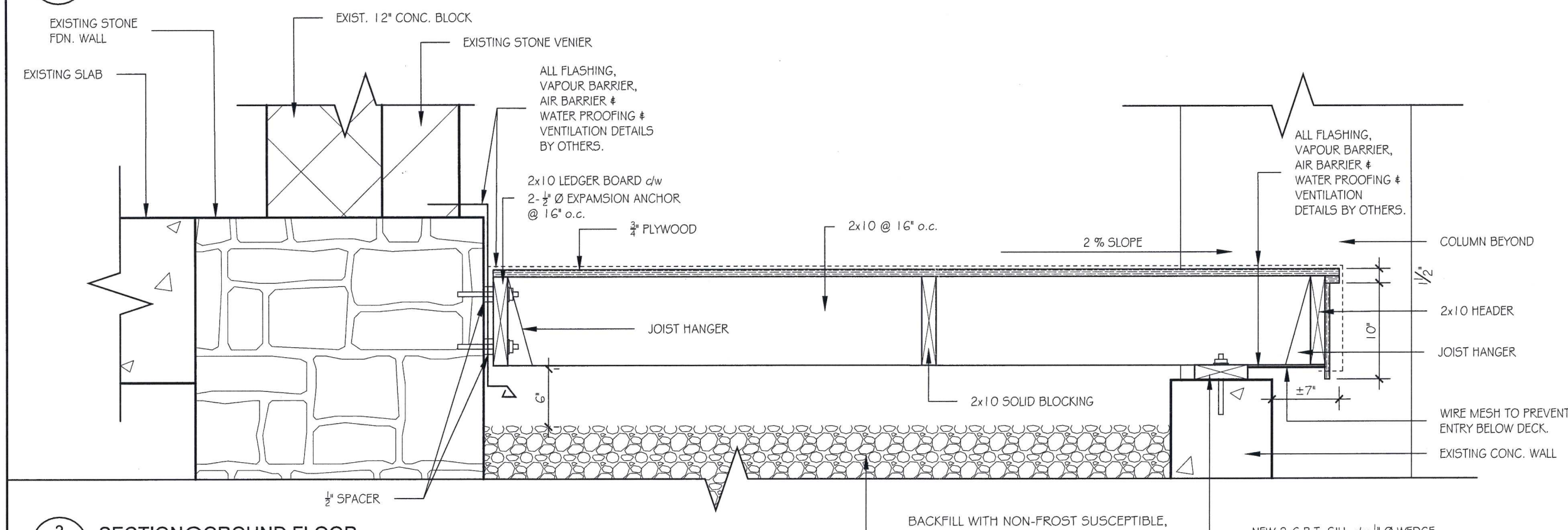

2 / SK6 SECTION@GROUND FLOOR SCALE 1"=1'-0"

GASCON ENGINEERING & STRUCTURAL DESIGN INC.

TEL: 343.999.4373
NOEL.GASCON@ROGERS.COM
WWW.GASCONESD.COM

CLIENT
Michanie Construction

LICENSED PROFESSIONAL ENGINEER
N.C.A. GASCON
90546920
1/10/2018
PROVINCE OF ONTARIO

NO	REVISION	DATE
1	ISSUED FOR REVIEW	8/31/2018
2	ISSUED FOR PERMIT	1/10/2018

PROJECT / LOCATION
BALCONY SLAB REPLACEMENT

2178 Laurier Ave
ROCKLAND, ONTARIO

DRAWING
SECTIONS

DESIGNED BY	APPROVED BY
Noel Gascon	NG
DRAWN BY	SCALE
EA	1"=1'-0"
DATE	
31-AUG-2018	
PROJECT NO.	SHEET NO.
2018-070	SK6

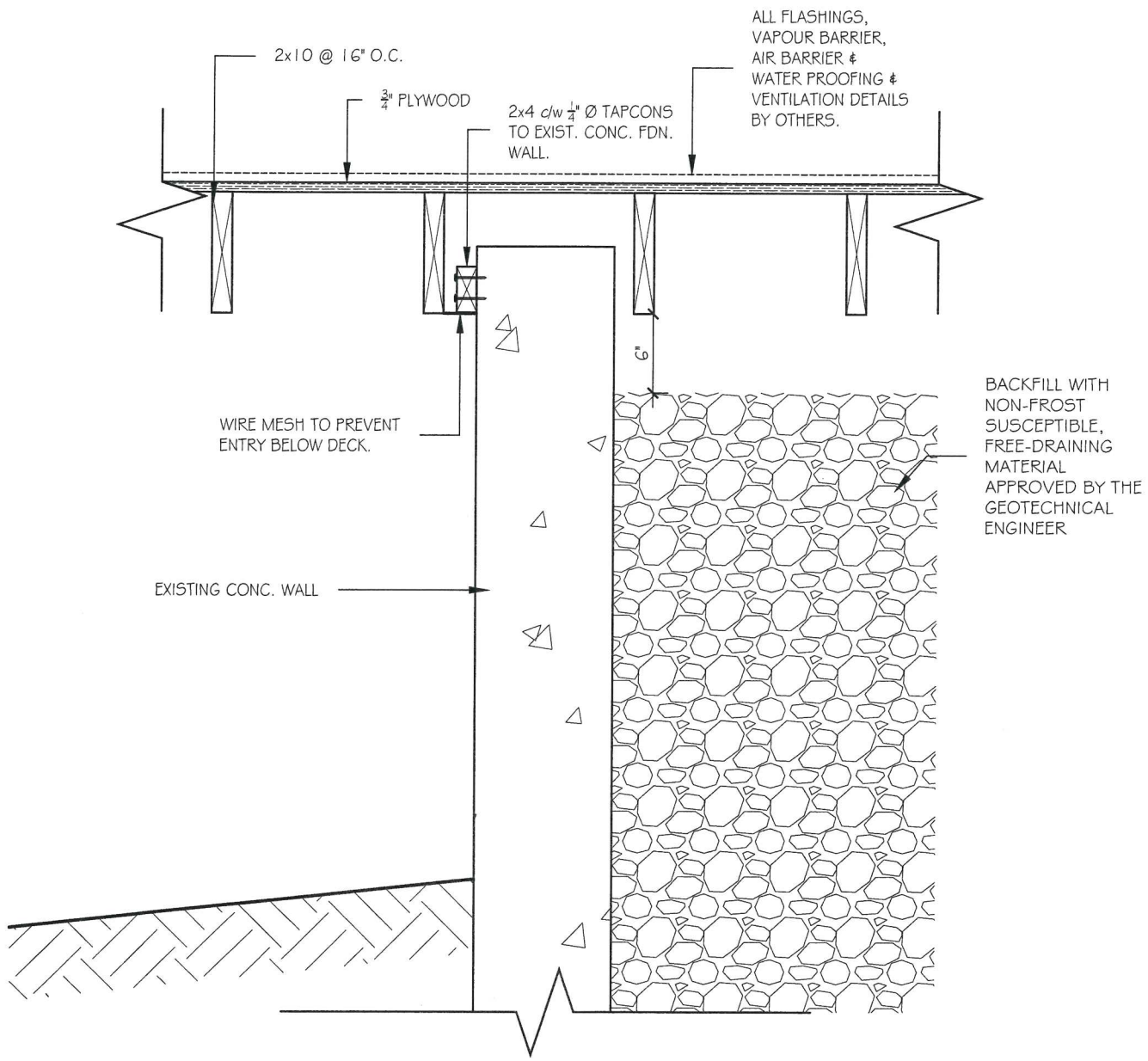

1 SK7 SECTION SCALE 1"=1'-0"

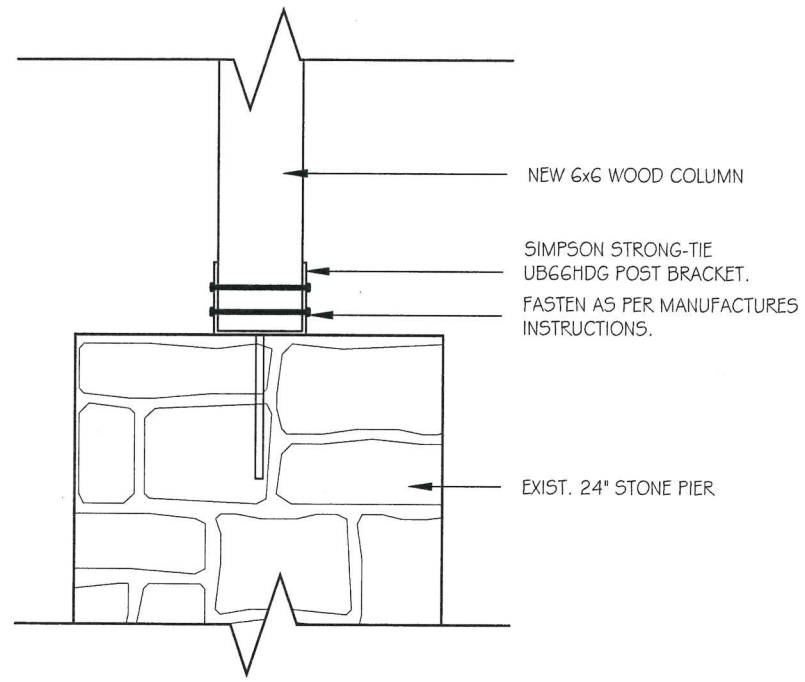

2 SK7 WOOD COLUMN CONNECTION TO PIER SCALE 1"=1'-0"

105

GASCON ENGINEERING & STRUCTURAL DESIGN INC.

TEL: 343.999.4373
NOEL.GASCON@ROGERS.COM
WWW.GASCONESD.COM

CLIENT
Michanie Construction

LICENSED PROFESSIONAL ENGINEER
N.C.A. GASCON
90546920
1/10/2018
PROVINCE OF ONTARIO

NO	REVISION	DATE
1	ISSUED FOR REVIEW	8/31/2018
2	ISSUED FOR PERMIT	1/10/2018

PROJECT / LOCATION
BALCONY SLAB REPLACEMENT

2178 Laurier Ave
ROCKLAND, ONTARIO

DRAWING
SECTION

DESIGNED BY	APPROVED BY
Noel Gascon	NG
DRAWN BY	SCALE
EA	AS NOTED
DATE	
31-AUG-2018	
PROJECT NO.	SHEET NO.
2018-070	SK7

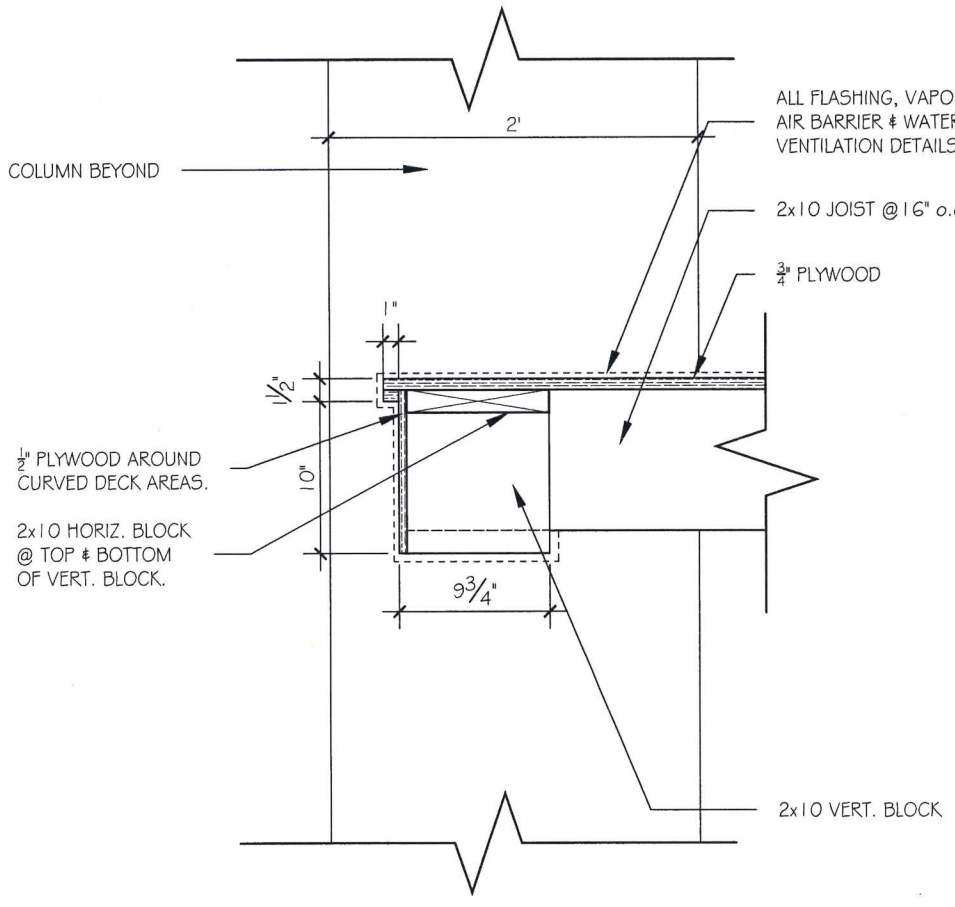

1 SK8 GROUND FLOOR HANGOVER DETAIL@ CURVERD BALCONY SCALE 1"=1'-0"

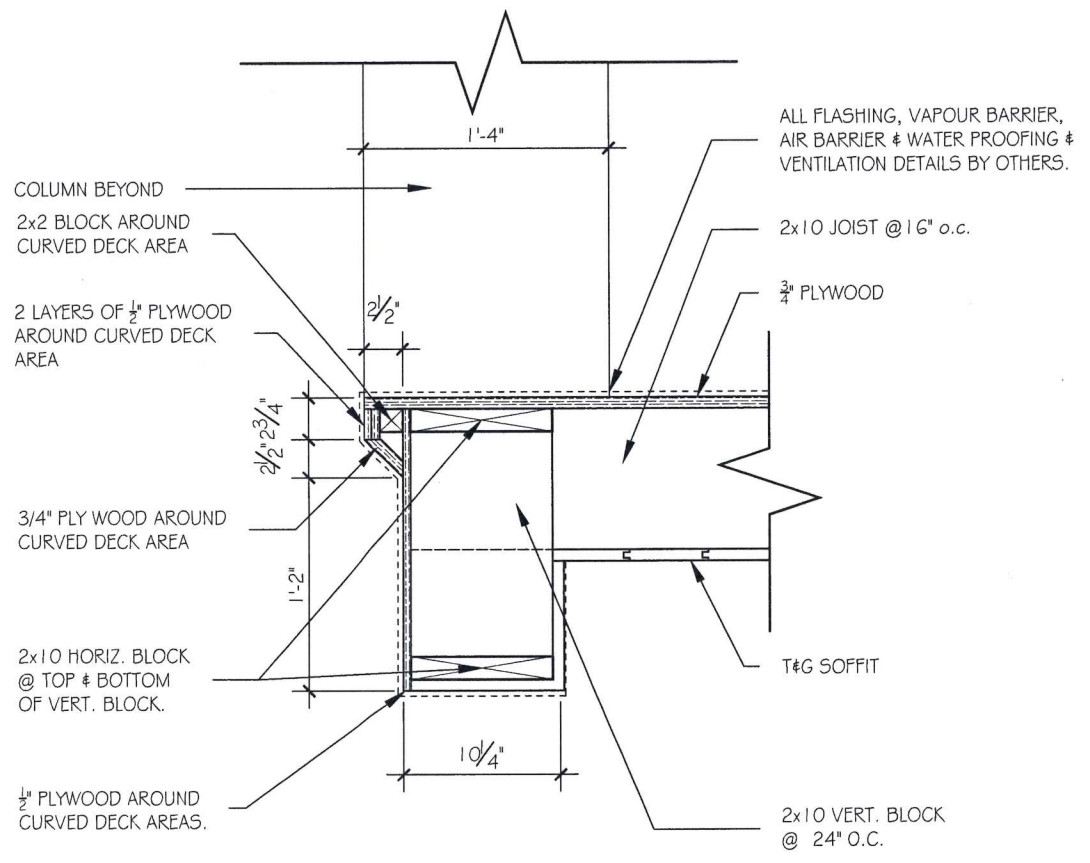

2 SK8 SECOND FLOOR HANGOVER DETAIL@ CURVERD BALCONY SCALE 1"=1'-0"

GASCON ENGINEERING & STRUCTURAL DESIGN INC.

TEL: 343.999.4373
NOEL.GASCON@ROGERS.COM
WWW.GASCONESD.COM

CLIENT
Michanie Construction

LICENSED PROFESSIONAL ENGINEER
N.C.A. GASCON
90546920
1/10/2018
PROVINCE OF ONTARIO

NO	REVISION	DATE
1	ISSUED FOR REVIEW	8/31/2018
2	ISSUED FOR PERMIT	1/10/2018

PROJECT / LOCATION
BALCONY SLAB REPLACEMENT

2178 Laurier Ave
ROCKLAND, ONTARIO

DRAWING
SECTION

DESIGNED BY	APPROVED BY
Noel Gascon	NG
DRAWN BY	SCALE
EA	AS NOTED
DATE	
31-AUG-2018	
PROJECT NO.	SHEET NO.
2018-070	SK8

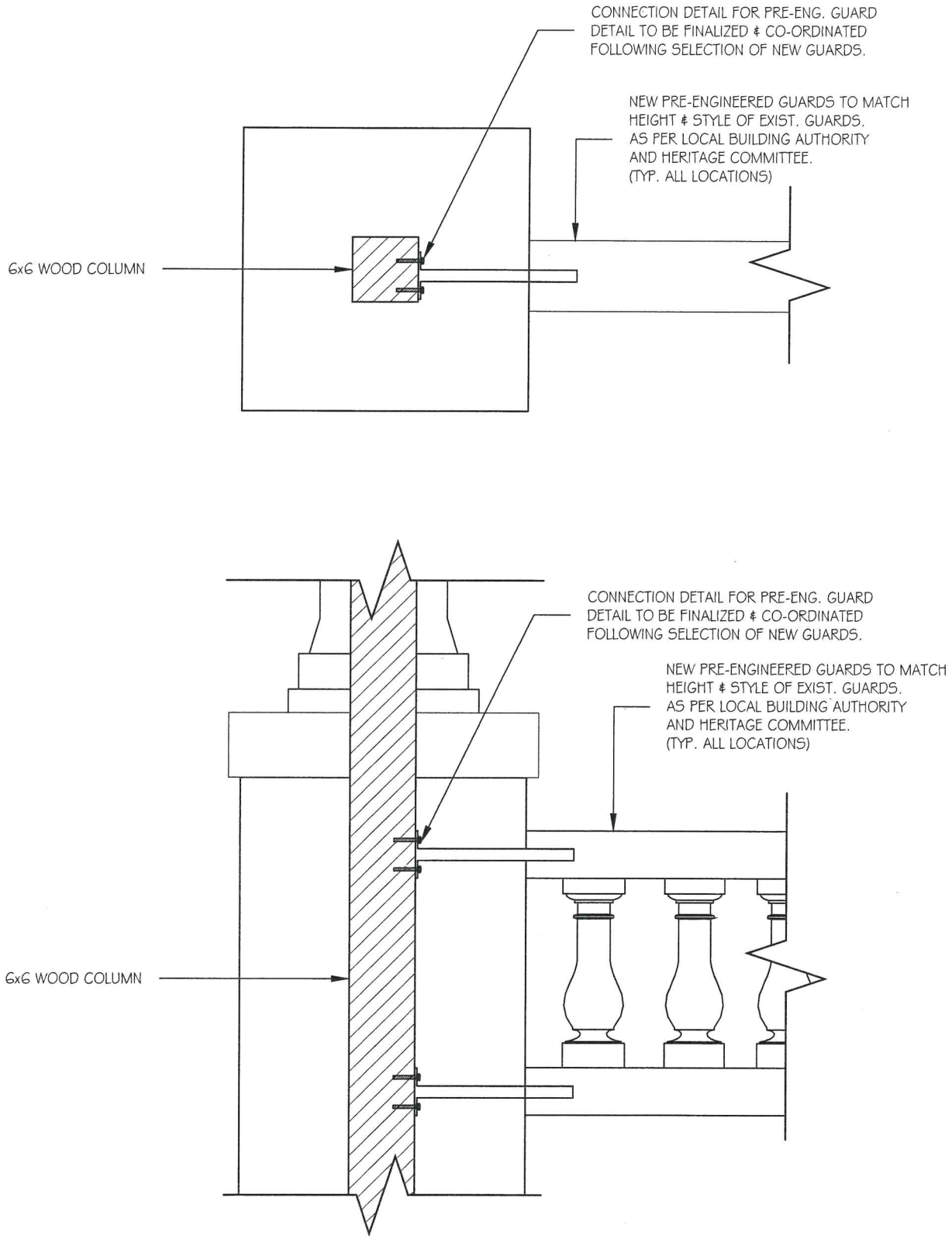

1 / SK9 GUARD'S CONNECTION DETAIL SCALE 1"=1'-0"

GENERAL NOTES:

1) ANY DEVIATION FROM CONDITIONS SHOWN ON THESE DRAWINGS, SHALL BE REPORTED TO THE ENGINEER PRIOR TO PROCEEDING WITH WORK.

2) DESIGN LOADS:
ROOF = 15 PSF (D) 36 PSF(S)
2ND FLOOR = 10 PSF (D) 100 PSF (L)
1ST FLOOR = 10 PSF (D) 100 PSF (L)

3) CONTRACTOR TO VERIFY EXISTING SERVICES AND SUPPORT AS REQUIRED. AS REQUIRED PRIOR TO EXCAVATION.

4) MATERIALS:
- A) WOOD TO BE SPF NO.2 OR BETTER.
- B) CONCRETE TO BE 20 MPA (3,000 PSI) @ 28 DAY STRENGTH.
- C) STRUCT. STEEL TO CSA G40.20/G40.21 -GRADE 350W
  CHANNELS GRADE 350W
  ANGLES GRADE 300W
- D) WELDING TO CSA W47.1 & W59
- E) CONC. BLOCK: f'_m= 15 MPA

5) ALL WORK TO BE IN CONFORMANCE WITH ONTARIO BUILDING CODE 2012

6) CONTRACTOR RESPONSIBLE FOR PROVIDING TEMPORARY SHORING TO COMPLETE WORK.

7) ALL PRE-MANUFACTURED PRODUCTS TO CONFORM TO & BE INSTALLED AS PER THE MANUFACTURERS SPECIFICATIONS AND INSTRUCTIONS.

8) SITE REVIEW OF STRUCTURAL ITEMS, AS NOTED ON THESE DRAWINGS, SHALL BE COORDINATED WITH GASCON ENGINEERING & STRUCTURAL DESIGN INC THROUGH THE DURATION OF THE PROJECT.

GASCON ENGINEERING & STRUCTURAL DESIGN INC.
TEL: 343.999.4373
NOEL.GASCON@ROGERS.COM
WWW.GASCONESD.COM

CLIENT
Michanie Construction

LICENSED PROFESSIONAL ENGINEER
N.C.A. GASCON
90546920
1/10/2018
PROVINCE OF ONTARIO

NO	REVISION	DATE
1	ISSUED FOR REVIEW	8/31/2018
2	ISSUED FOR PERMIT	1/10/2018

PROJECT / LOCATION
BALCONY SLAB REPLACEMENT
2178 Laurier Ave
ROCKLAND, ONTARIO

DRAWING
GUARD'S CONNECTION DETAIL
GENERAL NOTES

DESIGNED BY	APPROVED BY
Noel Gascon	NG
DRAWN BY	SCALE
EA	AS NOTED
DATE	
31-AUG-2018	
PROJECT NO.	SHEET NO.
2018-070	SK9

Clarence-Rockland

REPORT N° AMÉ-19-15-R

Date	10/01/2019
Submitted by	Claire Lemay
Subject	Application for Draft Plan Approval – Bourgon Lavigne Development – Part of Lot 21, Concession 10, Russell Rd
File N°	D-12-VVV-02

1) NATURE/GOAL :

Bourgon and Lavigne Development has submitted an application for the approval of a Draft Plan of Subdivision in order to create 19 lots for single detached dwellings and 10 lots for semi-detached dwellings (total of 39 dwelling units) with an extension of Danika Street and two new streets. The development will be connected to municipal water and will be on private individual septic systems.

The subject property is located south of Russell Road in Cheney, along the Bear Brook Creek, described as Part of Lot 21, Concession 10.

Figure 1: Keymap - Subject property indicated in dark blue

2) **DIRECTIVE/PREVIOUS POLICY :**
N/A

3) **DEPARTMENT'S RECOMMENDATION :**
THAT the Municipal Council approve the Draft Plan of Subdivision submitted by Bourgon Lavigne Development (file number D-VVV-02), with the conditions of approval listed under Section 7 of report No. AMÉ-19-15-R.

QUE le conseil municipal approuve l'ébauche de plan de lotissement soumis par Développement Bourgon Lavigne (filière no. D-12-VVV-02), avec les conditions d'approbation listées à la Section 7 du rapport no. AMÉ-19-15-R.

4) **BACKGROUND :**
This application is a resubmission of a lapsed Draft Plan of Subdivision, with some minor modifications. The development was originally given Draft Plan Approval by Municipal Council in 2007. This draft approval has since expired in 2012 and a new application for draft approval is therefore required. The first phase of the project is now complete and includes several single detached dwellings along the new streets Danika, Nellie, and Grand Tronc. The resubmission for Draft Plan Approval includes a few minor modifications to the proposed plan. These are: adding semi-detached dwellings on some lots where single detached dwellings had previously been proposed, and including a property to the west of the property originally covered by the draft approval in 2007 in order to provide a connection to Russell Road at the end of Danika Street.

5) **DISCUSSION :**

The *Planning Act*, R.S.O 1990 :

According to the *Planning Act,* Section 51, paragraph 24 stipulates that *"in considering a Draft Plan of Subdivision, regard shall be had, among other matters, to the health, safety, convenience, accessibility for persons with disabilities and welfare of the present and future inhabitants of the municipality."* Also, it shall have regards to the following 12 criteria:

a) the effect of development of the proposed subdivision on matters of provincial interest as referred to in section 2.

Section 2 of the Planning Act sets out a number of matters of provincial interest; these include the protection of ecological systems and agricultural and mineral resources and conservation of features of architectural, cultural, historical, archaeological or scientific interest. The subject site is not in a prime agricultural area, a mineral resource area, or an area with known cultural heritage and archaeological resources. The only natural feature on

the subject property is the Bear Brook Creek, and appropriate measures have been taken to ensure there are no negative impacts on this watercourse.

b) whether the proposed subdivision is premature or in the public interest.

The proposed subdivision is within the Community Policy Area, where development should occur. The proposed development is in the public's interest. There is municipal water available at that location; however the lots will be on private septic systems.

c) whether the plan conforms to the official plan and adjacent plans of subdivision, if any.

The proposed plan is located within the Community Policy Area where development should occur. The proposed uses and densities of the development comply with the Official Plan of the United Counties. The proposed draft plan is an extension of the previous adjacent development.

d) the suitability of the land for the purposes for which it is to be subdivided.

The land is suitable for the purposes for which it is to be subdivided. The land is relatively flat with a slope near the Bear Brook.

e) the number, width, location and proposed grades and elevations of highways, and the adequacy of them, and the highway linking the highways in the proposed subdivision with the established highway system in the vicinity and the adequacy of them.

The project consists of an extension of Danika Street and two new streets, all of which were previously part of the now-expired Draft Plan approved in 2007. Danika Street now extends to a future intersection with Russell Road in the proposed draft plan. The two new streets are both short streets which end in a cul-de-sac.

f) the dimensions and shapes of the proposed lots.

The dimensions and shapes of the proposed lots appear to be acceptable. They are between 961 m^2 (for a semi-detached dwelling) and 3229 m^2 (for a single detached dwelling). All of the proposed lots are large enough to accommodate the proposed dwelling type with its septic system and replacement area. It is recommended that the lots for semi-detached dwellings be separated through the part-lot control process following construction in order to ensure that the division wall between the two units

is precisely located along the property line.

g) the restrictions, if any, on the land proposed to be subdivided or the buildings and structures proposed to be erected and the restrictions, if any, on adjoining land.

A Fish Habitat Assessment was conducted and a 30 meter setback from the Fish Habitat will be respected. A Geotechnical Investigation was also conducted which includes the setback from the unstable slopes.

h) conservation of natural resources and flood control.

A "no development" zone will be conducted within 30 meters of the Bear Brook. It is to be noted that no building will be erected in the flood plain. A stormwater management plan has been approved for the project.

i) the adequacy of utilities and municipal services.

Utilities appear to be adequate. The lots will be serviced by municipal water and they will have private septic systems.

j) the adequacy of school sites.

The proposed subdivision is not too far from the schools in Hammond and on Russell Road, however school buses will be required.

k) the area of land, if any, within the proposed subdivision that, exclusive of highways, is to be conveyed or dedicated for public purposes.

No park is proposed in the Draft Plan of Subdivision. A payment of 5 % of the value of the land is required since there is already a park on Grand Tronc Street. This 5% cash-in-lieu fee shall be applied only to those portions of the proposed draft plan for which a parkland fee was not already paid as part of the initial development and shall be in accordance with the City's Parkland Dedication By-law.

l) the extent to which the plan's design optimizes the available supply, means of supplying, efficient use and conservation of energy.

The homes to be built on the Subdivision will respect the Ontario Building Codes which includes requirements for energy conservation.

Provincial Policy Statement :

The Provincial Policy Statement (PPS) provides policy direction on matters of provincial interest related to land use planning and development. The vision

for Ontario's land use planning system as mentioned in Part IV of the PPS indicates that the wise management of development may involve directing, promoting or sustaining growth, and as such, long-term gains should take precedence over short-term gains.

Firstly, Section 1.1.1 entitled Managing and directing land use to achieve efficient development and land use patterns states that:

"Healthy, liveable and safe communities are sustained by:

a) promoting efficient development and land use patterns which sustain the financial well-being of the Province and municipalities over the long term;

b) accommodating an appropriate range and mix of residential, employment (including industrial, commercial and institutional uses), recreational and open space uses to meet long-term needs;

c) avoiding development and land use patterns which may cause environmental or public health and safety concerns;

d) […]

e) promoting cost-effective development standards to minimize land consumption and servicing costs;

f) improving accessibility for persons with disabilities and the elderly by removing and/or preventing land use barriers which restrict their full participation in society; and

g) ensuring that necessary infrastructure, electricity generation facilities and transmission and distribution systems, and public service facilities are or will be available to meet current and projected needs; and

h) promoting development and land use patterns that conserve biodiversity and consider the impacts of a changing climate."

Section 1.1.3.1 states that settlement areas are to be the focus of growth and development. The proposed Subdivision is within the village of Cheney, which is considered a settlement area as per the PPS. The goal of this policy, to focus the growth in a settlement area, is therefore respected.

Section 1.1.3.2 states that land use patterns in settlement areas shall be based on densities and a mix of land uses that efficiently use land and

resources, are appropriate for, and efficiently use the infrastructure and public service facilities which are planned or available. The proposed Subdivision will have access to the municipal water service. Because there are no municipal sanitary sewers available within the village of Cheney, the development will be serviced by private individual septic systems. The proposed density of the development, consisting of single and semi-detached dwellings, is appropriate for this level of infrastructure.

Section 2.0 of the PPS calls for the protection of natural heritage features. The subject property is located along the Bear Brook Creek. Appropriate setbacks from the fish habitat are included in the draft plan. There are no other environmental features identified on this property.

Section 3.1, entitled "Natural Hazards," directs development to areas outside of lands which are subject to flooding hazards and/or erosion hazards. The proposed draft plan includes the required setbacks from the 100-year flood elevation and unstable slopes along the Bear Brook Creek.

Official Plan of the United Counties of Prescott and Russell :

The property is identified under a "Community Policy Area" designation on Schedule "A" of the Official Plan of the United Counties of Prescott and Russell. It is adjacent to the Bear Brook which is a Fish Habitat as shown on Schedule "B" of the Official Plan. There is also an unstable slope near the Bear Brook and a flood plain surrounding the Bear Brook and one of its tributaries as shown on Schedule "C" of the Official Plan. Figure 2 below indicates the elements contained on Schedules "A", "B" and "C" of the Official Plan of the United Counties of Prescott and Russell within the vicinity of the subject property.

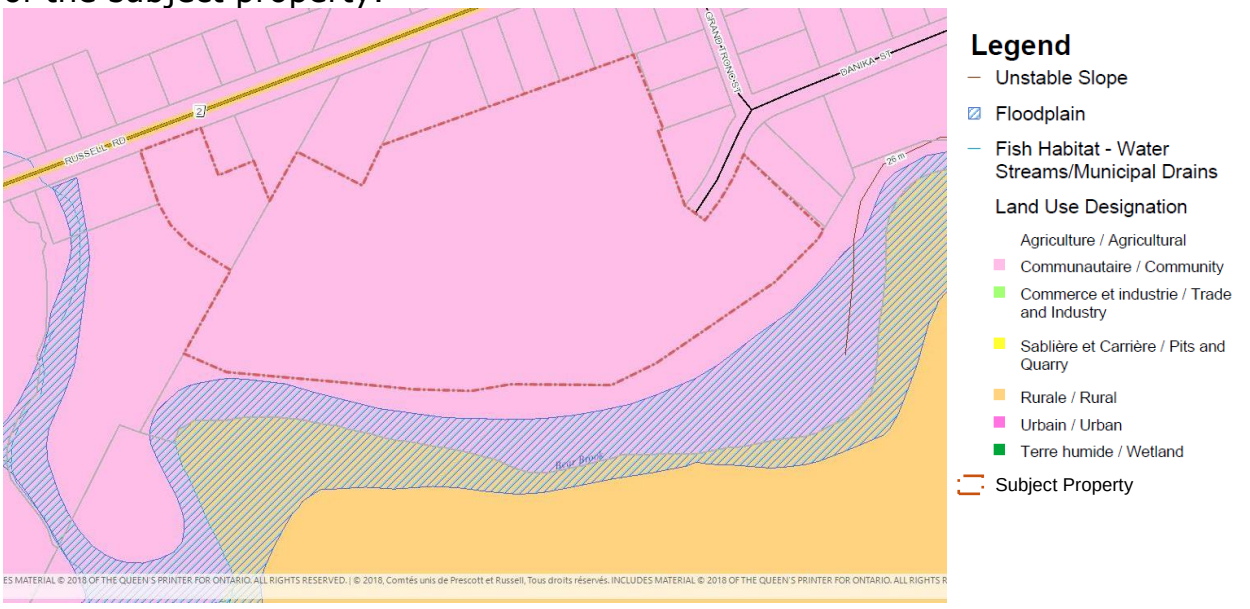

Figure 2: Official Plan of the United Counties of Prescott and Russell

The proposed residential uses are permitted by the Residential policies of section 2.3.7 of the Official Plan of the United Counties of Prescott and

Russell. Policy 8 of section 2.3.7 outlines the following criteria to be used for the evaluation of subdivision and other development applications:

> "a) permit and zone a range of housing types and sizes;
> b) identify and zone areas exclusively reserved for residential development;
> c) ensure adequate buffering of residential areas from incompatible non-residential uses through separation distance, landscaping or other appropriate means;
> […]
> g) permit accessory apartments;
> h) provide for open space and parkland and the protection of natural heritage features;
> […]
> l) when reviewing development applications consider the development criteria stated in Section 7.4;
> m) ensure the availability of adequate water and waste water treatment services."

Section 7.4.1 of the Official Plan of the United Counties of Prescott and Russell includes technical, environmental, and planning and design considerations for approval of applications for plans of subdivision.

Technical considerations: The application is complete in accordance with the requirements of Section 51 (17) and the applicable regulations under the Planning Act, R.S.O. 1990; the application conforms to the policies of the Official Plan of the United Counties; the application is appropriate for the current zoning of the property; and the development charges will be assessed at the time of submission of a building permit application.

Environmental considerations: The proposed development will be connected to the municipal water service. A hydrogeological study and terrain analysis has been completed both prior to the initial subdivision and a subsequent performance evaluation, completed following the initial development. The performance evaluation study concluded that there were no issues with proceeding with the subsequent phases of development proposed in this draft plan application and that the increase of density was appropriate. The study was reviewed and approved by the City and South Nation Conservation. An Environmental Site Assessment was completed for the initial development; the report concluded that there were no concerns regarding an adjacent service station. A geotechnical report was prepared for the initial development in order to address the slope stability concerns along the Bear Brook Creek. This report was approved and the findings incorporated into the civil design of the project. A fish habitat assessment was completed prior to the initial development and the recommended setback from the fish habitat has been incorporated into the proposed draft plan. A stormwater management report was completed to support the initial development and was approved by the City and South Nation Conservation

and an Environmental Compliance Approval was obtained by the MOECC in 2015 for the stormwater management facilities. No changes to the stormwater management are required as part of the resubmission of the plan of subdivision.

Planning and Design considerations: Considerations such as the lot and block configuration, compatibility with adjacent uses, road access and street layout, parks and open space amenities, right-of-way and easement requirements, and emergency and secondary accesses were reviewed in the initial application for draft approval in 2007. At that time, an extension of Danika Street to connect to Russell Road was recommended. This connection is included in the current proposal. The criteria of section 51(24) of the *Planning Act* are discussed above.

City of Clarence-Rockland Zoning By-law 2016-10:

The subject lands are presently shown within the "Village Residential First Density ––holding (RV1-h) Zone" on Schedule "E" of the Zoning By law No. 2016-10. Single and semi-detached dwellings are permitted in this zone. Prior to registration of the plan of subdivision, the removal of the holding provision will have to be approved by Council.

Street Names:

The proposed names of the three streets in this propose subdivision are: Danika Street, which is an extension of the existing Danika Street, Grand Ours Street, which is a short dead-end street with 9 houses lining both sides of the street, and Moïse Street, another short dead-end street with 14 houses lining both sides of the street. Due to the similarity between the proposed Moïse street and the existing Moïse-Gendron Street in Bourget, it is recommended that another name be suggested for this street. The street naming protocol also recommends street names which are a single word instead of compound names; a one-word alternative name for the proposed Grand Ours Street would be preferred. The suffix "Court" could be considered instead of "Street" for the two short dead-end streets.

Conclusion:

The proposed draft plan of subdivision is consistent with the Provincial Policy Statement. The proposed draft plan of subdivision conforms to the Official Plan of the United Counties of Prescott and Russell.

6) **CONSULTATION:**

A public meeting of the Planning Committee was held on January 9th. The residents of two adjacent properties on Russell Road made oral submissions at this meeting regarding concerns over water quality related to this

development. They said that the surface wells, which serviced their properties, were contaminated as a result of the construction of houses and septic systems as part of the first phase of the development. South Nation Conservation has indicated that the construction of nearby houses and septic systems "would generally not impact a well that way." These residents did not object to the proposed plan of subdivision. The residents also indicated that they would like the City to provide for the houses along Russell Road to the north of the proposed development to be able to connect to municipal water. The watermain in Russell Road currently ends at the intersection of Russell Road and Grand Tronc Street, so that the properties with civic numbers 430 to 500, which back onto the site of the proposed development, are unable to connect to municipal water. This request will be presented to the Municipal Council separately.

7) RECOMMENDATIONS OR COMMENTS FROM COMMITTEE/ OTHER DEPARTMENTS :

COMMENTS FROM AGENCIES AND INTERNAL DEPARTMENTS :

The United Counties of Prescott and Russell submitted comments regarding the conformity of the proposed subdivision with the Official Plan as well as other planning matters. These comments are in Attachment B.

South Nation Conservation submitted comments relating to the impact of the application on the local environment, including natural heritage and natural hazards. These comments are in Attachment C.

Agencies and Utilities:
Comments from Enbridge are attached in Attachment D, comments from HydroOne are attached in Attachment E, and comments from Canada Post are in Attachment F.

Other City Departments:
Community Services: 5% cash-in-lieu of parkland.
Construction division: No objections.
Finance Department: No objection.
Protective Services: No concerns.
Operations division: No comments other than that the subdivision drawings should meet the new engineering guidelines.

PLANNING COMMITEEE RECOMMENDATION:

THAT the Planning Committee recommends to the municipal Council the approval of the Draft Plan of Subdivision submitted by Bourgon Lavigne Development (file number D-VVV-02), with the conditions of approval listed under Section 7 of report No. AMÉ-19-05-R.

QUE le comité d'aménagement recommande au conseil municipal

l'approbation de l'ébauche de plan de lotissement soumis par Développement Bourgon Lavigne (filière no. D-12-VVV-02), avec les conditions d'approbation listées à la Section 7 du rapport no. AMÉ-19-05-R

RECOMMENDED DRAFT PLAN CONDITIONS:

General

1. This approval applies to the Draft Plan prepared by Lascelles Engineering & Associates and certified by Denis Dutrisac, OLS, dated November 5th, 2018, to show the following 19 lots for single detached dwellings and 10 lots for semi-detached dwellings, 1 block, and 3 streets.
2. The Owner agrees, by entering into a Subdivision agreement, to satisfy all requirements, financial and otherwise, of the City of Clarence-Rockland, including but not limited to, the phasing of the plan for registration, the provision of roads, the installation of services, utilities and drainage.
3. That the Subdivision agreement between the Owner and the City of Clarence-Rockland be registered against the land to which it applies once the Plan of Subdivision is registered.
4. Prior to any further division of Lots or Blocks, the City of Clarence-Rockland may require an additional agreement to address any new or amended conditions.
5. The Owner agrees to convey, at no cost to the City of Clarence-Rockland, all easements and reserves that are required at the discretion and to the satisfaction of the City of Clarence Rockland.
6. The Owner shall obtain such permits as may be required from Municipal or Provincial authorities and shall file copies thereof with the Director of Infrastructure and Planning.
7. The Owner shall employ Professional Engineers to the satisfaction of the City, to design and supervise the construction of the Subdivision Works in accordance with the City's Specifications. No deviation from the City Specifications is permitted without the written consent of the City. « As Built » drawings of the development works shall be provided to the City's satisfaction, once construction is completed.
8. The Owner agrees to co-ordinate the staging of the Subdivision to the satisfaction of the City in consideration of the construction of the Works with the development of other lands in the area, or provision of underground services within the Subdivision.
9. The Owner agrees to promptly notify the City Clerk in writing should any of the Works required by the Subdivision Agreement by assigned to other parties. Such notification shall not release the Owner of his obligation to construct such Works.

10. The Owner agrees that its obligation to construct or install the Works, as required by the Subdivision Agreement, shall not be assigned to any party who purchases land on which a residence has been constructed.
11. The Owner agrees to implement the recommendations of all applicable reports. The Owner acknowledges and agrees that all reports and/or studies required as a result of the approval of the Plan of Subdivision shall be implemented to the satisfaction of the City at the sole expense of the Owner. Furthermore, the City may require certification by the Owner's Professional consultants that the works have been designed and constructed in accordance with the approved reports, studies, standards specifications and plans to the satisfaction of the City.

Zoning

12. Prior to registration of the plan of subdivision, the City of Clarence Rockland shall be satisfied that the proposed plan of subdivision conforms with a zoning by law approved under the requirements of the Planning Act, with all possibility of appeal to the Local Planning Appeal Tribunal exhausted. An application to remove the "H – holding" provisions shall be filed with the City of Clarence-Rockland for approval.
13. For each registration, the Owner shall provide a surveyor's certificate from an Ontario Land Surveyor indicating the frontage and area of all lots/blocks on the final plan.

Highways/Roads/Walkways

14. The Owner shall dedicate, by by-law, all proposed streets included in this Draft Plan, shown as Public Highway to the City.
15. That the Owner agrees to prepare and submit a plan and profile of the proposed streets prepared by a Professional Engineer in accordance with municipal standards to the satisfaction of the City of Clarence-Rockland.
16. That the infrastructure plans demonstrate all streets to be built to municipal standards.
17. That the final approved street names be at least 75% in French, to the satisfaction of the City of Clarence-Rockland.
18. The Owner agrees to restore existing adjacent streets and other services which may be disturbed by the development of the plan.

Park and Open Space

19. That the owner pays 5% of the value of the land as cash-in-lieu of parkland in accordance with the City of Clarence-Rockland Parkland Dedication By-law.
20. That Block 21 on Plan 50M-299 be transferred to the City of Clarence-Rockland.

Stormwater Management Plan, Sediment and Erosion Control Plan

21. In completion of all stormwater works, the Owner shall provide certification to the City of Clarence-Rockland, through a Professional Engineer, that all measures have been implemented in conformity with the Stormwater Management Plan.

22. The Owner agrees to prepare a Sediment and Erosion Control Plan appropriate to site conditions prior to undertaking any site alterations (filling, grading, removal of vegetation, etc.) and how it is to be implemented during all the phases of the site preparation and construction in accordance with the current Best Management Practices for Erosion and Sediment Control to the satisfaction of the City of Clarence-Rockland.

Construction

23. The Owner shall grade, landscape and install erosion control measures on any portion of the proposed lots or adjacent lands in the possession of the Owner which have been filled or where the natural vegetation has been disturbed which, in the opinion of the Director of Infrastructure and Planning, is creating a nuisance, hazard and/or eyesore.

Septic System

24. The Owner agrees that the design, construction and operation of each individual septic system shall be conforming to Ontario Building Code.

Heat Pumps

25. That a section be registered on title indicating that the purchasers of Lots 1 to 13 of Phase 1 and lots 1 to 20 of Phase 2 acknowledge that if groundwater source heat pumps are to be allowed in the subdivision, then a qualified professional should carry out a "hydrogeological impact study" for the use of these pumps.

Utilities

26. Such easements and maintenance agreements which may be required for electrical, gas, telephone and cablevision facilities, shall be provided and agreed to by the Owner, to the satisfaction of the appropriate authority, and that the Owner shall ensure that these easement documents are registered on title immediately following registration of the final plan, and the affected agencies are duly notified.

27. Where the relocation or removal of any existing on-site/adjacent utility facility, including electrical, gas, telephone and cablevision, is required as a direct result of the development, the Owner shall pay the actual cost associated therewith to the satisfaction of the appropriate utility authority.

28. The Owner shall coordinate the preparation of an overall "utility distribution plan" showing the location (shared or otherwise) and

installation, timing and phasing of all required utilities (on-grade, below-grade or above-grade), including on-site drainage facilities and streetscaping. Such location plan shall be to the satisfaction of all affected authorities and shall consider their respective standards and specification manuals, where applicable.

29. The Owner shall meet the requirements of Canada Post Corporation for postal delivery facilities, to the satisfaction of the City of Clarence Rockland.
30. The Owner shall meet the requirements of Enbridge Gas Distribution Inc. and Hydro One, to the satisfaction of the City of Clarence Rockland.
31. All the public utilities (including electricity, cable, gas and telephone) shall be underground.

Streets and Street Lights

32. The street lights shall meet the standards of the City of Clarence-Rockland. Please note that LED lights are required.
33. The Owner agrees to prepare a "Street Light Plan" for all the Subdivision to the satisfaction of the City of Clarence-Rockland.
34. The Owner agrees to prepare a "Sign Plan" and a "Line painting plan" in order to indicate the location of each street sign (Stop signs, street names).

Purchase and Sale's Agreements and Covenants on Title

35. Any person who, prior to draft approval, entered into a Purchase and Sale's Agreement with respect to lots or blocks created by this Subdivision, shall be permitted to withdraw from such agreement without penalty and with full refund of any deposit paid, up until the acknowledgement noted below. The Owner shall provide the City of Clarence-Rockland an acknowledgement from those purchasers who signed before the plan was draft approved, that the plan had not received draft approval by the City of Clarence-Rockland. The Owner agrees that the Purchase and Sale's Agreements signed prior to draft approval shall be amended to contain a clause to notify purchasers of this fact.

Financial Requirements

36. Upon Draft Plan approval, City services and infrastructures within the Plan of Subdivision may be installed provided appropriate financial security, insurance, and a letter of indemnity are posted to the satisfaction of the City of Clarence Rockland.
37. Prior to registration of the Plan of Subdivision, the City of Clarence Rockland shall be satisfied that the processing fee, if any required, has been paid in full.

United Counties of Prescott-Russell

38. That the right-of-way for County Road No. 2 (Russell Road) along the proposed Block 21 and the proposed Road allowance named Danika Street is widened as required to 13 metres from the centreline of the road, and that the Transfer/Deed of land conveying the said land to the Corporation of the United Counties of Prescott and Russell shall be prepared and executed at no cost or encumbrance in consideration of the payment of $1.00.

39. Prior to final approval, the Owner shall convey by deed to the Corporation of the United Counties of Prescott and Russell a 0.3-metre reserve extending across the entire frontage of County Road No. 2 (Russell Road) on the proposed Block 21, which shall be prepared and executed at no cost or encumbrance to the Counties in consideration of the payment of $1.00. Any existing entranceways across the reserve shall be closed and physically removed.

40. The Owner shall submit to the United Counties of Prescott and Russell a Lot Grading and Drainage Plan, prepared by a Professional Engineer licensed in the Province of Ontario, which shall detail the drainage of County Road No. 2 (Russell Road) into the existing drainage ditch on the lands subject to the draft plan of subdivision approval and indicate how it is to be implemented, for review and approval by the Director of the Public Works Department, to the satisfaction of the Counties.

41. The Owner shall submit to the United Counties of Prescott and Russell on-site and off-site works engineering design drawings and cost estimate as may be required for works in the drainage ditch servicing County Road No. 2 (Russell Road), for review and approval by the Director of the Public Works Department, to the satisfaction of the Counties.

42. The Owner shall grant and transfer at no cost and free of any encumbrance for the sum of $1.00, a drainage easement of a minimum width of 10.0 metres to the Corporation of the United Counties of Prescott and Russell. The drainage easement shall be a minimum width of 5.0 metres calculated from the centre of the drainage ditch, which runs along the western limit of proposed Lots 10 and 11 of Phase 2, and calculated from the centre of the drainage ditch, which runs along the eastern limit of proposed Block 21 and of the Owner’s retained lands. That such easements and maintenance agreement which may be required for drainage shall be provided and agreed to by the Owner, to the satisfaction of the United Counties of Prescott and Russell; and that the Owner shall ensure that these easements documents are registered on Title immediately following registration of the final plan; and that the Corporation of the United Counties of Prescott and Russell is duly notified.

43. The Owner shall agree in the Subdivision Agreement not to interfere with existing drainage patterns for adjacent lands during construction and after completion of the development of this subdivision. Drainage from the existing adjacent lands including County Road No. 2 (Russell

Road) shall be accommodated by this development, to the satisfaction of the Counties.

44. Prior to final approval, the Owner shall submit to the United Counties of Prescott and Russell off-site works engineering design drawings and external servicing plans for all works within any County Road right-of-way for review and approval by the Director of the Public Works Department, to the satisfaction of the Counties.

45. The Owner shall agree in the Subdivision Agreement that County Road No. 2 (Russell Road) shall be reinstated to the satisfaction of the United Counties of Prescott and Russell if damage occurs from construction traffic, as deemed necessary by the Counties.

46. That the Owner shall agree in the Subdivision Agreement, in wording satisfactory to the Counties that the Owner and/or its agents, shall obtain a Road Cut Permit from the United Counties of Prescott and Russell prior to the commencement of any works within any County Road right-of-way, in association with this development.

47. That the letter of undertaking between the Owner (Bourgon-Lavigne) and the City of Clarence-Rockland, signed in 2011, for a payment structure between three developers in the Cheney settlement area to construct a left turn lane on County Road No. 2 (Russell Road) be updated by the Owner to reflect the 2019 construction costs and the costs attributed to each developer in Cheney. The redistribution of costs shall consider the new proposed numbers of units for each development in Cheney and shall deduct the developers' payments received by the United Counties of Prescott and Russell, for the different phases, from the total amount due when recalculating the distribution of costs. The revised letter of undertaking signed by the Owner and the City of Clarence-Rockland shall be to the satisfaction of the United Counties of Prescott and Russell and an executed copy shall be provided to the Counties.

48. Either on the final M-Plan or on a reference plan that is prepared based on the final M-Plan, the Owner shall identify temporary turning circles or hammerhead turnarounds at all dead ends and cul-de-sacs on municipal roads to facilitate the safe turnaround of the United Counties emergency services vehicles. A copy of the proposed final M-plan or reference plan showing the temporary turning circles or hammerhead turnarounds shall be provided to the United Counties of Prescott and Russell for review and approval.

49. The Owner shall agree in the Subdivision Agreement, in wording satisfactory to the United Counties of Prescott and Russell that prior to the development of Phase 2, Danika Street shall connect to County Road No. 2 (Russell Road) in order to provide access to the United Counties emergency services vehicles.

50. The Owner shall agree in the Subdivision Agreement, in wording satisfactory to the United Counties of Prescott and Russell and the City

of Clarence-Rockland, that prior to approval of any site plan agreement for the blocks adjacent to a County Road, copies of the site plan drawings shall be provided to the United Counties of Prescott and Russell for review and approval.

51. That the street names and civic address numbering shall be submitted for review and approval to the United Counties of Prescott and Russell to ensure compliance with the 911 database systems.
52. The Owner shall provide, to the satisfaction of the United Counties of Prescott and Russell, a georeferenced dwg file showing only the new and existing parcel limits together with the related lots and blocks numbers from the final plan intended for registration. The file projection must be in UTM NAD 83 Zone 18N.
53. The Owner shall provide to the United Counties of Prescott and Russell a copy in PDF format of the final plan intended for registration.
54. The Owner shall provide to the United Counties of Prescott and Russell a copy of the executed Subdivision Agreement.
55. That the Owner acknowledges that the Subdivision Agreement shall contain wording acceptable to the United Counties of Prescott and Russell in order to implement the above noted conditions.
56. Prior to final approval, the United Counties of Prescott and Russell shall advise in writing the City of Clarence-Rockland how conditions 38 through 55 have been satisfied.

South Nation Conservation

57. The owner agrees to abide by the Slope Stability setbacks established through the Geotechnical Investigation, prepared by Levac Robichaud Leclerc Associates, signed, stamped and dated December 4, 2006, and delineated on a final Draft Plan of Subdivision, to the satisfaction of the City of Clarence-Rockland and South Nation Conservation.
58. That the owner agrees to abide by the Fish Habitat boundary, as delineated in the Proposed Site Development Plan – Drafting Phasing Plan Dwg. No. 0447-01, File 05447, prepared by Levac Robichaud Leclerc Associates and dated June, 2007 to the satisfaction of the City of Clarence-Rockland and South Nation Conservation.
59. The owner agrees to delineate on a final Draft Plan of Subdivision, the inland extents of the regulated area under the *Development, Interference with Wetlands and Alterations to Shorelines and Watercourses* Ontario Regulation 170/06. The regulated area will be derived from the greatest inland extents of the 100-year floodplain setback and slope stability setback, to the satisfaction of South Nation Conservation.
60. The owner/developer agrees to obtain all necessary permits under Ontario Regulation 170/06 from South Nation Conservation for any

proposed development or site alterations within the regulated area, and for any interference with a watercourse.

61. The owner agrees to complete the Department of Fisheries and Oceans (DFO) self-assessment, and to request a review from the DFO where the proposed activity or criteria necessitate a review.

62. The owner agrees to establish a 15 metre "no touch" zone from the Fish Habitat boundary line, as delineated in the Proposed Site Development Plan – Drafting Phasing Plan Dwg. No. 0447-01, File 05447, prepared by Levac Robichaud Leclerc Associates and dated June, 2007, and a final Draft Plan of Subdivision, to the satisfaction of the City of Clarence-Rockland and South Nation Conservation.

63. The owner agrees to prepare and submit a Stormwater Managemetn Plan and describe how it is to be implemented in accordance with the current Stormwater Management Best Practices to the satisfaction of the City of Clarence-Rockland and South Nation Conservation. The plan should address both water quality and quantity concerns. The plan should consider proposed on-lot controls to reduce the rate of runoff and minimize contaminant transportation. Models, assumptions and calculations of pre and post development runoff are to be included with this submission.

64. The owner agrees to prepare and submit a Sediment and Erosion Control Plan, appropriate to the site conditions, prior to undertaking any site alterations (filling, grading, removal of vegetation, etc.) and indicate how it is to be implemented during all the phases of the site preparation and construction in accordance with the current Best Management Practices for Erosion and Sediment Control to the satisfaction of the City of Clarence-Rockland and South Nation Conservation.

65. The owner agrees to prepare and submit a Lot Grading and Drainage Plan and indicate how it is to be implemented to the satisfaction of the City of Clarence-Rockland and South Nation Conservation.

66. A draft subdivision agreement be provided to South Nation Conservation for review, and the final subdivision agreement contains wording acceptable to the South Nation Conservation to implement the above noted conditions.

Other Conditions

67. The developer shall connect the watermain of phase two to the watermain along Russell Road leading to Limoges, or, if such watermain has not yet been installed at the time of completion of Phase two of the development, that the watermain be brought to the lot line on Russell Road beside Block 21.

68. That a 0.3 metre reserve be transferred to the City of Clarence-Rockland along Danika Street on the west side of Block 21 as shown on the Draft Plan of Subdivision.

69. That the Subdivision Agreement between the developer and the City include a provision that the Agreement of Purchase and Sale for all lots contain a clause to be registered on title advising the purchasers to consult the topographic plan and the grading plan for the complete subdivision and for the lot to be purchased.

70. That the Subdivision Agreement between the developer and the City include a provision that the Agreement of Purchase and Sale for all lots contain a clause to be registered on title advising the purchasers of:

    a. Lots 1 to 5 of Phase 1 and lots 1 to 4 of Phase 2 to respect a 15 meter developmental setback from the top of the slope, a 15 meter setback from the flood line and a 15 meter "no touch" zone from the Fish Habitat boundary line;

    b. Lots 5 to 10 of Phase 2 to respect a 30 meter developmental setback from the top of the slope, a 15 meter setback from the flood line and a 15 meter "no touch" zone from the Fish Habitat boundary line.

71. The Owner shall install at his own fees a black "chain link fence" at a height of 1.5 meters (5 feet), located on the rear property line of the lots 1 to 5 of Phase 1 and lots 1 to 10 of Phase 2, which are abutting the Bearbrook Creek. The fence must be installed on private property.

Closing Conditions

72. The Owner shall inform the purchaser after registration of each lot or block of the development charges that have been paid or which are still applicable to the lot or block. The applicable development charges shall be as stated as of the time of the conveyance of the relevant lot or block and the statement shall be provided at the time of the conveyance. The statement of the owner of the applicable development charges shall also contain the statement that the development charges are subject to changes in accordance with the *Development Charges Act*, 1997 and the *Education Development Charges Act*.

73. At any time prior to final approval of this plan for registration, the City of Clarence Rockland may, in accordance with Section 51 (44) of the *Planning Act*, R.S.O. 1990, amend, delete or add conditions and this may include the need for amended or new studies.

74. The Subdivision Agreement shall state that the conditions run with the land and are binding on the Owner's heirs, successors and assigns.

75. Prior to registration of the Plan of Subdivision, the City of Clarence Rockland is to be satisfied that Conditions 1 to 74 have been fulfilled.

76. If the Plan of Subdivision has not been registered by February 4, 2024, the draft approval shall lapse pursuant to Section 51 (32) of the Planning Act, 1990. Extensions may only be granted under the provisions of Section 51 (33) of the said Planning Act prior to the lapsing date.

8) **FINANCIAL IMPACT (expenses/material/etc.):**
N/A

9) **LEGAL IMPLICATIONS :**
N/A

10) **RISK MANAGEMENT :**
N/A

11) **STRATEGIC IMPLICATIONS :**
N/A

12) **SUPPORTING DOCUMENTS:**

Attachment A - Draft Plan of Subdivision
Attachment B - Comments from the United Counties
Attachment C - Comments from South Nation Conservation
Attachment D – Enbridge Comments
Attachment E – Hydro One Comments
Attachment F – Canada Post Comments

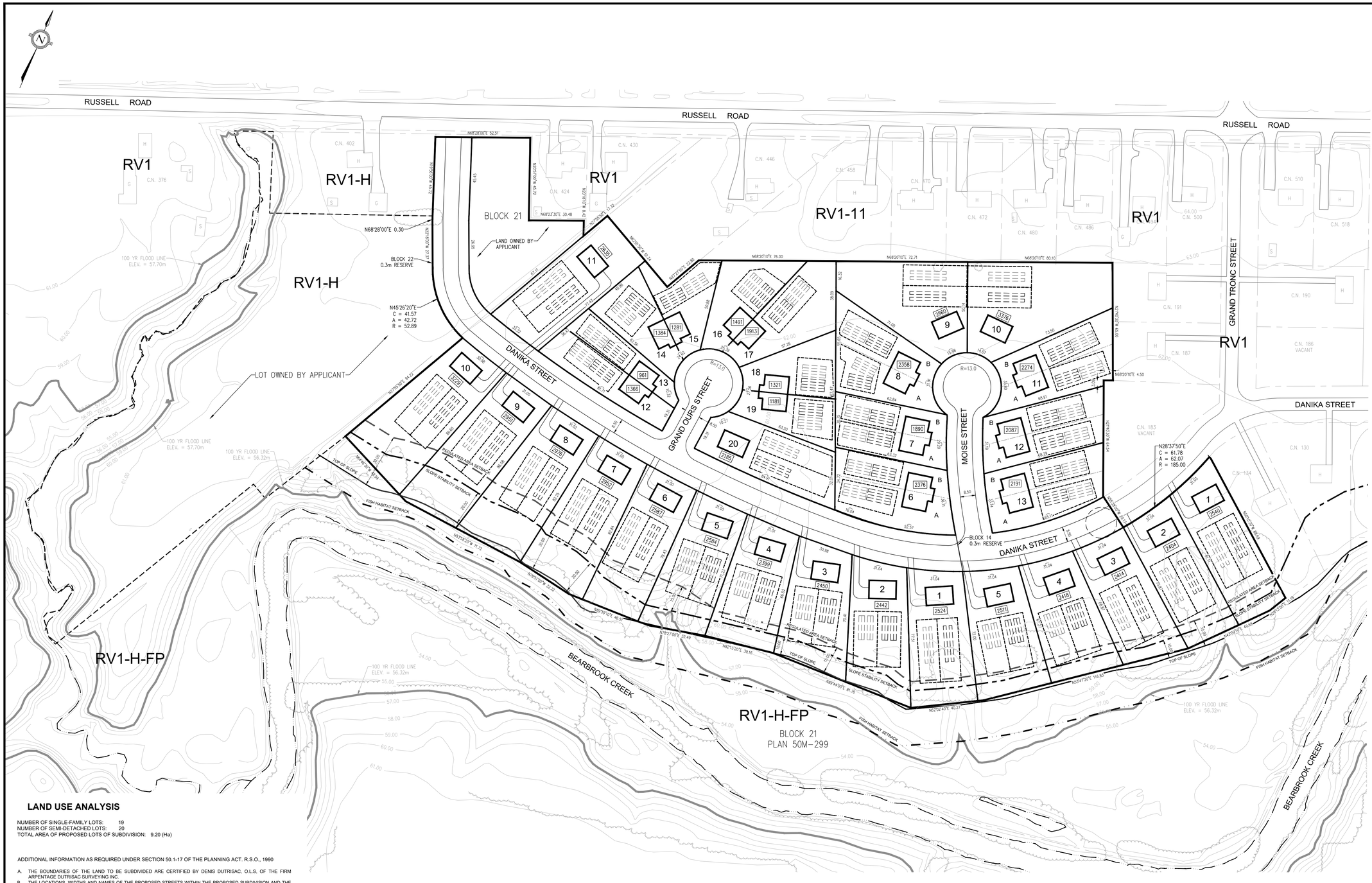

LAND USE ANALYSIS

NUMBER OF SINGLE-FAMILY LOTS: 19
NUMBER OF SEMI-DETACHED LOTS: 20
TOTAL AREA OF PROPOSED LOTS OF SUBDIVISION: 9.20 (Ha)

ADDITIONAL INFORMATION AS REQUIRED UNDER SECTION 50.1-17 OF THE PLANNING ACT. R.S.O., 1990

A. THE BOUNDARIES OF THE LAND TO BE SUBDIVIDED ARE CERTIFIED BY DENIS DUTRISAC, O.L.S, OF THE FIRM ARPENTAGE DUTRISAC SURVEYING INC.
B. THE LOCATIONS, WIDTHS AND NAMES OF THE PROPOSED STREETS WITHIN THE PROPOSED SUBDIVISION AND THE STREETS ON WHICH THE SUBDIVISION ABUTS ARE SHOWN ON THE PLAN.
C. THE KEY PLAN ILLUSTRATES THAT THE APPLICANT OWNS ADJACENT LAND. THE KEY PLAN ALSO ILLUSTRATES EVERY ADJACENT SUBDIVISION, THE EXISTING STREET CONFIGURATION IN THE VICINITY OF THE PROPOSED SUBDIVISION, AND THE RELATIONSHIP OF THE SUBJECT LAND WITH THE ADJACENT LOT FABRIC OF THE VILLAGE OF CHENEY, ONTARIO.
D. THE PURPOSE OF THIS PROPOSED SUBDIVISION IS TO CREATE RESIDENTIAL LOTS.
E. THE EXISTING USES OF ALL ADJACENT LAND IS SHOWN ON THE PLAN.
F. THE APPROXIMATE DIMENSIONS AND LAYOUT OF THE PROPOSED LOTS ARE SHOWN ON THE PLAN.
G. ALL NATURAL AND ARTIFICIAL FEATURES WITHIN AND ADJACENT TO THE LAND PROPOSED TO BE SUBDIVIDED ARE SHOWN ON THE PLAN.
H. DOMESTIC WATER WILL BE PROVIDED TO THE PROPOSED SUBDIVIONS BY AN EXISTING AND AVAILABLE MUNICIPAL WATERMAIN.
I. THE SURFICIAL OVERBURDEN SOIL UNDERLYING THE PROPOSED SUBDIVISION CONSIST OF A THIN LAYER OF SAND OVERLYING A THICK CLAY DEPOSIT.
J. EXISTING CONTOURS LINE OF THE LAND'S TOPOGRAPHY WITHIN AND ADJACENT TO THE PROPOSED SUBDIVISION ARE SHOWN ON THE PLAN. THESE WERE DERIVED FROM AERIAL PHOTOGRAPHY AND DIGITALISED USING PHOTOGRAMMETRIC METHODS BY THE BASE MAPPING CO. LTD.
K. MUNICIPAL WATER AND STORM SEWERS ARE AVAILABLE TO SERVICE THE PROPOSED SUBDIVISION ALONG WITH GARBAGE COLLECTION AND DISPOSAL. OTHER PUBLIC SERVICES AVAILABLE INCLUDE ELECTRICITY, CABLE AND NATURAL GAS.
L. THE AREA TO THE SOUTH OF THE PROPOSED SUBDIVISION HAS BEEN DESIGNATED AS FLOOD PLAIN AND HAVING SENSITIVE SLOPES. THE REQUIRED SETBACKS ARE SHOWN ON THE PLAN.

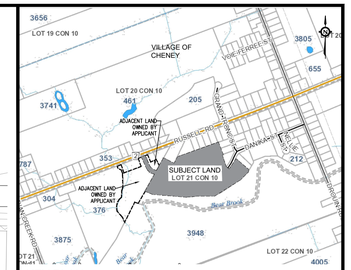

KEY PLAN
SCALE: 1:15 000

DRAWING TITLE:
PROPOSED DRAFT PLAN OF SUBDIVISION

PROJECT:
BOURGON & LAVIGNE SUBDIVISION
PART OF LOT 21 CONCESSION 10
GEOGRAPHIC TOWNSHIP OF CLARENCE
CITY OF CLARENCE-ROCKLAND

APPLICANT:
DEVELOPPEMENT BOURGON AND LAVIGNE DEVELOPMENT INC.

LEGEND:

- LOT FABRIC LINES
- EXISTING SHORELINE
- SUBDIVISION BOUNDARY
- PROPERTY OWNED BY APPLICANT
- EXISTING PROPERTY LINES
- LIMITS OF FISH HABITAT SETBACK - 30m OFFSET FROM SLOPE STABILITY SETBACK
- SLOPE STABILITY SETBACK
- 100YR FLOOD LINE
- INLAND EXTENT OF REGULATED AREA
- EXISTING OUTER EDGE OF WOODLAND
- 1m CONTOUR LINE
- EDGE OF EXISTING ASPHALT AND DRIVEWAY
- EDGE OF PROPOSED ASPHALT
- LOT DIVISION LINE FOR SEMI-DETACHED LOTS
- PROPOSED DWELLING
- XXXX — PROPOSED LOT AREA (m²)
- PROPOSED LOCATION OF NEW SEPTIC SYSTEM W/ SPARE
- H — EXISTING DWELLING
- S — EXISTING SHED
- G — EXISTING GARAGE

20m 10 0 20 40m
SCALE: 1:1000

SURVEYOR'S CERTIFICATE

I HERBY CERTIFY THAT THE BOUNDARIES OF THE LANDS TO BE SUBDIVIDED AND THEIR RELATIONSHIP TO ADJACENT LAND ARE CORRECTLY SHOWN.

Nov. 5th 2018
DATED

DENIS DUTRISAC
ONTARIO LAND SURVEYOR
ROCKLAND ONTARIO

OWNER'S CERTIFICATE

I HERBY AUTHORIZED LASCELLES ENGINEERING AND ASSOCIATES TO PREPARE AND SUBMIT THIS PLAN TO THE CITY OF CLARENCE-ROCKLAND FOR REVIEW AND APPROVAL.

5 / 11 / 18
DATED

DEVELOPPEMENT BOURGON & LAVIGNE DEVELOPMENT INC.
MR. JACQUES BOURGON, PRESIDENT
I HAVE THE AUTHORITY TO BIND THE CORPORATION

5/11/18
DATED

DEVELOPPEMENT BOURGON & LAVIGNE DEVELOPMENT INC.
MR. RENE LAVIGNE, SECRETARY-TREASURER
I HAVE THE AUTHORITY TO BIND THE CORPORATION

LASCELLES ENGINEERING & ASSOCIATES
870 JAMES STREET
HAWKESBURY ONTARIO
K6A 2W8
OFFICE: (613) 632-0241
FAX: (613) 632-1669

File Location: Y:\PROJECTS\2017 - PROJECTS\170126 - Jacques Bourgon\4-Drawings\Civil\Draft Plan\170126 - Draft Plan - signed.dwg (SP-1)

Prescott Russell
Urbanisme et Foresterie · Travaux publics
Planning and Forestry · Public Works

December 12, 2018

City of Clarence-Rockland
Infrastructure and Planning Department
1560, Laurier Street
Rockland, ON, K4K 1P7

Attn: Claire Lemay

Subject: **Proposed Draft Plan of Subdivision**
Part of Lot 21, Concession 10, Township of Clarence
Bourgon-Lavigne Subdivision, Cheney
Your File No.: **D-12-VVV**

Mrs. Lemay:

The Planning and Forestry Department in consultation with the Emergency Services Department and the Public Works Department of the United Counties of Prescott and Russell (UCPR) has completed its review of the above-noted Draft Plan of Subdivision application. The following outlines our comments, requirements and conditions of approval.

We understand that the subdivision proposal located in the Community Policy Area consists of 19 lots for single detached dwellings and 10 lots for semi-detached dwellings (20 units) with two new streets and an extension of Danika Street, which will connect to County Road No. 2 (Russell Road). Further, the development will connect to the municipal water distribution system and private individual septic systems will service each unit.

We note, from the Schedules of the UCPR Official Plan, the presence of Fish Habitats, Unstable Slopes and Flood Plain on the subject lands. As a reminder, Sections 5 and 6 of the UCPR Official Plan provide policies, which aim to protect natural heritage features and resources and the public health and safety.

In addition, when drafting the preliminary approval conditions, we kindly ask you to respect the provisions of Section 7.4.1 'Plans of Subdivision' of the UCPR Official Plan and to include the following conditions:

1. That the right-of-way for County Road No. 2 (Russell Road) along the proposed Block 21 and the proposed Road allowance named Danika Street is widened as required to 13 metres from the centreline of the road, and that the Transfer/Deed of land conveying the said land to the Corporation of the United Counties of Prescott and Russell shall be prepared and executed at no cost or encumbrance in consideration of the payment of $1.00.

2. Prior to final approval, the Owner shall convey by deed to the Corporation of the United Counties of Prescott and Russell a 0.3-metre reserve extending across the entire frontage of County Road No. 2 (Russell Road) on the proposed Block 21, which shall be prepared and executed at no cost or encumbrance to the Counties in consideration of the payment of $1.00. Any existing entranceways across the reserve shall be closed and physically removed.

3. The Owner shall submit to the United Counties of Prescott and Russell a Lot Grading and Drainage Plan, prepared by a Professional Engineer licensed in the Province of Ontario, which shall detail the drainage of County Road No. 2 (Russell Road) into the existing drainage ditch on the lands subject to the draft plan of subdivision approval and indicate how it is to be implemented, for review and approval by the Director of the Public Works Department, to the satisfaction of the Counties.

4. The Owner shall submit to the United Counties of Prescott and Russell on-site and off-site works engineering design drawings and cost estimate as may be required for works in the drainage ditch servicing County Road No. 2 (Russell Road), for review and approval by the Director of the Public Works Department, to the satisfaction of the Counties.

5. The Owner shall grant and transfer at no cost and free of any encumbrance for the sum of $1.00, a drainage easement of a minimum width of 10.0 metres to the Corporation of the United Counties of Prescott and Russell. The drainage easement shall be a minimum width of 5.0 metres calculated from the centre of the drainage ditch, which runs along the western limit of proposed Lots 10 and 11 of Phase 2, and calculated from the centre of the drainage ditch, which runs along the eastern limit of proposed Block 21 and of the Owner's retained lands. That such easements and maintenance agreement which may be required for drainage shall be provided and agreed to by the Owner, to the satisfaction of the United Counties of Prescott and Russell; and that the Owner shall ensure that these easements documents are registered on Title immediately following registration of the final plan; and that the Corporation of the United Counties of Prescott and Russell is duly notified.

6. The Owner shall agree in the Subdivision Agreement not to interfere with existing drainage patterns for adjacent lands during construction and after completion of the development of this subdivision. Drainage from the

existing adjacent lands including County Road No. 2 (Russell Road) shall be accommodated by this development, to the satisfaction of the Counties.

7. Prior to final approval, the Owner shall submit to the United Counties of Prescott and Russell off-site works engineering design drawings and external servicing plans for all works within any County Road right-of-way for review and approval by the Director of the Public Works Department, to the satisfaction of the Counties.

8. The Owner shall agree in the Subdivision Agreement that County Road No. 2 (Russell Road) shall be reinstated to the satisfaction of the United Counties of Prescott and Russell if damage occurs from construction traffic, as deemed necessary by the Counties.

9. That the Owner shall agree in the Subdivision Agreement, in wording satisfactory to the Counties that the Owner and/or its agents, shall obtain a Road Cut Permit from the United Counties of Prescott and Russell prior to the commencement of any works within any County Road right-of-way, in association with this development.

10. That the letter of undertaking between the Owner (Bourgon-Lavigne) and the City of Clarence-Rockland, signed in 2011, for a payment structure between three developers in the Cheney settlement area to construct a left turn lane on County Road No. 2 (Russell Road) be updated by the Owner to reflect the 2019 construction costs and the costs attributed to each developer in Cheney. The redistribution of costs shall consider the new proposed numbers of units for each development in Cheney and shall deduct the developers' payments received by the United Counties of Prescott and Russell, for the different phases, from the total amount due when recalculating the distribution of costs. The revised letter of undertaking signed by the Owner and the City of Clarence-Rockland shall be to the satisfaction of the United Counties of Prescott and Russell and an executed copy shall be provided to the Counties.

11. Either on the final M-Plan or on a reference plan that is prepared based on the final M-Plan, the Owner shall identify temporary turning circles or hammerhead turnarounds at all dead ends and cul-de-sacs on municipal roads to facilitate the safe turnaround of the United Counties emergency services vehicles. A copy of the proposed final M-plan or reference plan showing the temporary turning circles or hammerhead turnarounds shall be provided to the United Counties of Prescott and Russell for review and approval.

12. The Owner shall agree in the Subdivision Agreement, in wording satisfactory to the United Counties of Prescott and Russell that prior to the development of Phase 2, Danika Street shall connect to County Road No. 2 (Russell Road) in order to provide access to the United Counties emergency services vehicles.

13. The Owner shall agree in the Subdivision Agreement, in wording satisfactory to the United Counties of Prescott and Russell, that prior to approval of any site plan agreement for the blocks adjacent to a County Road, copies of the site plan drawings shall be provided to the United Counties of Prescott and Russell for review and approval.

14. That the street names and civic address numbering shall be submitted for review and approval to the United Counties of Prescott and Russell to ensure compliance with the 911 database systems.

15. The Owner shall provide, to the satisfaction of the United Counties of Prescott and Russell, a georeferenced dwg file showing only the new and existing parcel limits together with the related lots and blocks numbers from the final plan intended for registration. The file projection must be in UTM NAD 83 Zone 18N.

16. The Owner shall provide to the United Counties of Prescott and Russell a copy in PDF format of the final plan intended for registration.

17. The Owner shall provide to the United Counties of Prescott and Russell a copy of the executed Subdivision Agreement.

18. That the Owner acknowledges that the Subdivision Agreement shall contain wording acceptable to the United Counties of Prescott and Russell in order to implement the above noted conditions.

19. Prior to final approval, the United Counties of Prescott and Russell shall advise in writing the City of Clarence-Rockland how conditions 1 through 18 have been satisfied.

We would appreciate receiving a copy of your Council's decision on this application for our records. We trust this information is to your satisfaction. Should you require further explanation please contact the undersigned.

Sincerely,

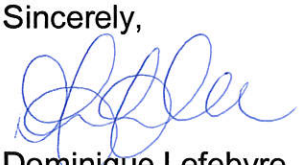

Dominique Lefebvre, MCIP, RPP
Senior Planner

SOUTH NATION CONSERVATION
DE LA NATION SUD

Via E-mail (clemay@clarence-rockland.com**)** December 11, 2018

Claire Lemay
Municipal Planner
Infrastructure and Planning Department
The City of Clarence Rockland
1560 rue Laurier Street
Rockland, ON K4K 1P7

Re: Bourgon & Lavigne Subdivision Revision
Part of Lot 21, Concession 10
Village of Cheney
The City of Clarence Rockland
Former Township of Clarence

Dear Ms. Lemay,

South Nation Conservation (SNC) has received and reviewed the following documents concerning a Plan of Subdivision at the above noted location.

i. Cover Letter – Application for Approval of a Plan of Subdivision. Prepared by LaScelles Engineers and Associates. Dated November 7, 2018.
ii. Application for Approval of a Plan of Subdivision. Dated November 8, 2018.
iii. Proposed Draft Plan of Subdivision. Prepared by LaScelles Engineers and Associates. Dated November 5, 2018.

It is our understanding that the application represents two phases of a former subdivision application that has lapsed. The revised plan involves two residential phases:

Phase 1 containing 13 lots (7 detached, 6 semi-detached units), and
Phase 2 containing 20 lots (12 detached, 8 semi-detached units).

The development will be on municipal water and private sanitary systems.

An additional parcel to the west has been acquired since the initial application to enable vehicular access to Russell Road, but no residential development is considered on the additional lands under the current application.

SOUTH NATION CONSERVATION
DE LA NATION SUD

We have considered the impact of this application on the local environment, as outlined under Sections 2.1 (Natural Heritage) and 3.1 (Natural Hazards) of the Provincial Policy Statement (April 2014), issued under Section 3 of the *Planning Act*, 1990.

Our review has also considered the Sewage System Management Agreement between the City of Clarence Rockland and SNC.

SNC offers the following comments on the application:

Aquatic Habitat

The property borders the Bearbrook Creek and contains several tributaries. The following plan and studies were previously reviewed and accepted by SNC:

i. Fish Habitat Assessment Proposed Bourgon-Lavigne Subdivision Cheney, Ontario. Prepared by G.A. Packman & Associates dated December 20, 2006.
ii. Fish Habitat Assessment – Additional Information. Prepared by Levac Robichaud Leclerc Associates dated August 21, 2007.
iii. Proposed Site Development Plan – Drafting Phasing Plan. Dwg. No. 0447-01, File 05447, prepared by Levac Robichaud Leclerc Associates and dated June, 2007.

Under the *Fisheries Act*, a project must avoid causing serious harm to fish unless authorized by the Minister of Fisheries and Ocean. A self-assessment must be completed and a DFO review requested if the activities or criteria trigger the review. Information on the process can be found at the DFO website (http://www.dfo-mpo.gc.ca/pnw-ppe/index-eng.html).

As a qualified environmental professional, SNC may assist the proponent through the self-assessment and request for review, at the request of the owner.

Stormwater Management

For the initial subdivision application, SNC provided a final review of a stormwater management report and associated plans in a letter of November 2008. Stormwater management for the current application depends on a pond situated on adjacent lands to the east. According to the cover letter submitted with the application, the pond has been constructed, and the impact of replacing detached units with semi-detached units was reviewed by Lascelles Engineering in a letter dated April 2018.

SOUTH NATION CONSERVATION
DE LA NATION SUD

This letter should be reviewed by SNC to ensure the existing ponds can accommodate the proposed land use change. Any changes to the storm water management, grading and drainage, and sediment and erosion control should also be reviewed by SNC.

Hydrogeological Study and Terrain Analysis

The subdivision agreement for the initial application indicates that the subdivision will be registered in phases, and that each phase will require a performance evaluation of the previous phases. As part of the initial phase, the performance report considered the increased residential density for Phase 1 of the current application.

The following performance report was received and reviewed for the first phase of the initial application:

i. Hydrogeological Review – Phase II, Bourgon-Lavigne Residential Subdivision. Prepared by Lascelles Engineering Ltd. Dated January 9th, 2018.

SNC has accepted the findings of the Hydrogeological Review in a letter dated February 13, 2018, including the increased density for Phase 1 of the current subdivision application. A performance report will also be necessary to confirm the increased density proposed for Phase 2.

The final development of the lots will need to conform to Part 8 (Sewage Systems) of the Ontario Building Code, including minimum setbacks from property lines for the higher density semi-detached lots.

Unstable Slopes

A slope stability setback was established and delineated in the following documents for the initial subdivision application.

i. Geotechnical Investigation. Prepared by Levac Robichaud Leclerc Associates. Dated November 2006. Signed, stamped and dated December 4, 2006.
ii. Proposed Site Development Plan – Drafting Phasing Plan. Dwg. No. 0447-01, File 05447, prepared by Levac Robichaud Leclerc Associates and dated June, 2007.

The setbacks delineated in the Proposed Site Development Plan was accepted by SNC, and a similar setback has been delineated on current Proposed Draft Plan of Subdivision. The revised plan should include clearly labelled setback distances for the different zones

SOUTH NATION CONSERVATION
DE LA NATION SUD

along Bearbrook Creek to ensure the recommended setbacks are properly implemented.

Any encroachment into the setback, including septic systems, will require a site-specific geotechnical investigation.

Floodplain

In cooperation with local municipalities and the Province, Conservation Authorities operate flood control programs to minimize flood risk to residents, homes and businesses.

In eastern Ontario, the regulatory flood level is the 100-year flood, calculated as having a 1% chance of being equalled or exceeded in any given year, or having an annual return period of 100 years on average.

Specifically, the 100-year flood level for the residential lots has been determined to be 56.32 metres above sea level (MASL).

The vacant parcel to the west is adjacent to a tributary of the Bearbrook Creek. The 100-year flood level is approximately 57.70 MASL, however, this figure may be refined through further analysis.

A floodplain elevation has been delineated on the Draft Plan of Subdivision for the current application. The table of contents indicates incorrectly an elevation of 56.00 MASL for the residential lands. As noted above, this elevation does not apply to the vacant lands to the west.

Ontario Regulation 170/06

SNC implements Ontario Regulation 170/06, *Development Interference with Wetlands and Alterations to Shorelines and Watercourses*, developed under Section 28 of the *Conservation Authorities Act*.

Any development or site alteration within the following setback areas will require a permit, and restrictions may apply.

Phase 1: 15m setback from the top of slope for lots 1-5
Phase 2: 15m setback from top of slope for lots 1-4
30m setback from top of slope for lots 5-10
15m setback from the 100 year flood level for lots 5 & 6 where applicable

SOUTH NATION CONSERVATION
DE LA NATION SUD

SNC recommends that the inland regulation limit be depicted on the Proposed Draft Plan of Subdivision to clearly communicate the extent of the regulated area. In addition, any interference with a watercourse will require a permit, and restrictions may apply.

Conclusion

SNC recommends that the Proposed Draft Plan of Subdivision, prepared by LaScelles Engineering and Associates Ltd., dated November 5, 2018, be revised to include the following:

- clearly labelled setback distances for each slope setback zone along Bearbrook Creek;
- correct floodplain elevations; and
- the inland extents of the regulated areas, based on the appropriate hazard.

SNC recommends the following conditions be included in the decision:

1. The owner agrees to abide by the Slope Stability setbacks established through the Geotechnical Investigation, prepared by Levac Robichaud Leclerc Associates, signed, stamped and dated December 4, 2006, and delineated on a final Draft Plan of Subdivision, to the satisfaction of the City of Clarence Rockland and South Nation Conservation.

2. The owner agrees to abide by the fish habitat boundary, as delineated in the Proposed Site Development Plan – Drafting Phasing Plan. Dwg. No. 0447-01, file 05447, prepared by Levac Robichaud Leclerc Associates and dated June, 2007, and delineated on a final Draft Plan of Subdivision, to the satisfaction of the City of Clarence Rockland and South Nation Conservation.

3. The owner agrees to delineate on a final Draft Plan of Subdivision, the inland extents of the regulated area under the *Development, Interference with Wetlands and Alterations to Shorelines and Watercourses,* Ontario Regulation 170/06. The regulated area will be derived from the greatest inland extents of the 100-year floodplain setback and slope stability setback, to the satisfaction of South Nation Conservation.

SOUTH NATION CONSERVATION
DE LA NATION SUD

4. The owner/developer agrees to obtain all necessary permits under Ontario Regulation 170/06 from South Nation Conservation for any proposed development or site alterations within the regulated area, and for any interference with a watercourse.

5. The owner agrees to complete the Department of Fisheries and Oceans (DFO) self-assessment, and to request a review from the DFO where the proposed activity or criteria necessitate a review.

6. The owner agrees to establish a 15 metre “no touch” zone from the fish habitat boundary line, as delineated in the Proposed Site Development Plan – Drafting Phasing Plan Dwg. No. 0447-01, file 05447, prepared by Levac Robichaud Leclerc Associates and dated June, 2007, and a final Draft Plan of Subdivision, to the satisfaction of the City of Clarence Rockland and South Nation Conservation.

7. The owner agrees to prepare and submit a Storm Water Management Plan and describe how it is to be implemented in accordance with the current Storm Water Management Best Management Practices to the satisfaction of the City of Clarence Rockland and South Nation Conservation. The plan should address both water quality and quantity concerns. The plan should consider proposed on-lot controls to reduce the rate of runoff and minimize contaminant transportation. Models, assumptions and calculations of pre and post development runoff are to be included with this submission.

8. The owner agrees to prepare and submit a Sediment and Erosion Control Plan, appropriate to the site conditions, prior to undertaking any site alterations (filling, grading, removal of vegetation, etc.) and indicate how it is to be implemented during all the phases of the site preparation and construction in accordance with the current Best Management Practices for Erosion and Sediment Control to the satisfaction of the City of Clarence Rockland and South Nation Conservation.

9. The owner agrees to prepare and submit a Lot Grading and Drainage Plan and indicate how it is to be implemented to the satisfaction of the City of Clarence Rockland and South Nation Conservation.

10. A draft subdivision agreement be provided to South Nation Conservation for review, and the final subdivision agreement contains wording acceptable to the South Nation Conservation to implement the above noted conditions.

SOUTH NATION
CONSERVATION
DE LA NATION SUD

I trust this review meets your needs. Please feel free to contact our office if there are any questions or concerns.

Kind regards,

James Holland, MSc RPP
Watershed Planner
South Nation Conservation

SNC-5551-2018

Enbridge Gas Distribution
500 Consumers Road
North York, Ontario M2J 1P8
Canada

November 29, 2018

Claire Lemay, MCIP, RPP
Municipal Planner
Infrastructure & Planning Department
City of Clarence - Rockland
1560 Laurier Street
Rockland, ON K4K 1P7

Dear Claire,

Re: Draft Plan of Subdivision
Development Bougon & Lavigne Development Inc.
South of Russell Road
Part of Lot 21, Concession 10
City of Clarence - Rockland

Enbridge Gas Distribution does not object to the proposed application(s).

This response does not constitute a pipe locate or clearance for construction.

The applicant shall contact Enbridge Gas Distribution's Customer Connections department by emailing SalesArea60@enbridge.com for service and meter installation details and to ensure all gas piping is installed prior to the commencement of site landscaping (including, but not limited to: tree planting, silva cells, and/or soil trenches) and/or asphalt paving.

If the gas main needs to be relocated as a result of changes in the alignment or grade of the future road allowances or for temporary gas pipe installations pertaining to phase construction, all costs are the responsibility of the applicant.

In the event that easement(s) are required to service this development, the applicant will provide the easement(s) to Enbridge Gas Distribution at no cost.

The applicant will grade all road allowances to as close to final elevation as possible, provide necessary field survey information and all approved municipal road cross sections, identifying all utility locations prior to the installation of the gas piping.

Enbridge Gas Distribution reserves the right to amend or remove development conditions.

Sincerely,

Alice Coleman
Municipal Planning Coordinator
ENBRIDGE GAS DISTRIBUTION
TEL: 416-495-5386
MunicipalPlanning@enbridge.com
500 Consumers Rd, North York, ON, M2J 1P8

enbridgegas.com
Integrity. Safety. Respect.
AC/jh

Claire Lemay

From: Bishmita.Parajuli@HydroOne.com
Sent: Friday, November 30, 2018 3:48 PM
To: Claire Lemay
Subject: Clarence-rockland, Part of Lot 21 Concession 10 , 21-11-2018

Hello,

We are in receipt of your Plan of Subdivision application, 21-11-2018 dated November 21,2018. We have reviewed the documents concerning the noted Plan and have no comments or concerns at this time. **Our preliminary review considers issues affecting Hydro One's 'High Voltage Facilities and Corridor Lands' only.**

For proposals affecting 'Low Voltage Distribution Facilities' the Owner/Applicant should consult their local area Distribution Supplier. Where Hydro One is the local supplier the Owner/Applicant must contact the Hydro subdivision group at subdivision@Hydroone.com or 1-866-272-3330.

To confirm if Hydro One is your local distributor please follow the following link:
http://www.hydroone.com/StormCenter3/

Please select " Service Territory Overly" and locate address in question by entering the address or by zooming in and out of the map

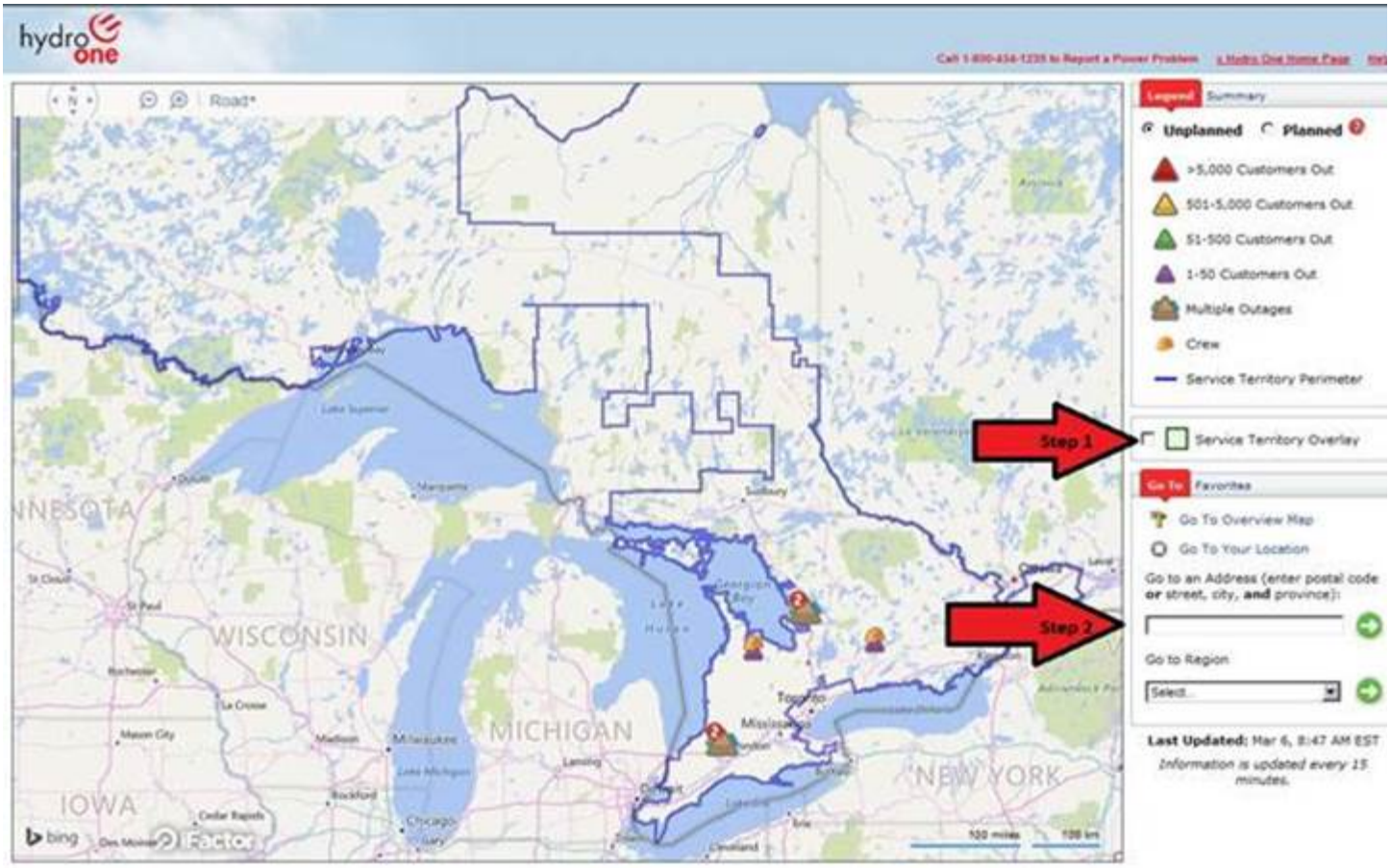

If you have any further questions or inquiries, please contact Customer Service at 1-888-664-9376 or e-mail CustomerCommunications@HydroOne.com to be connected to your Local Operations Centre

If you have any questions please feel free to contact myself.

Thank you,

Bishmita Parajuli
University Co-Op Student, Real Estate Department
185 Clegg Road
Markham, ON L6G 1B7

Bishmita.Parajuli@HydroOne.com

www.HydroOne.com

On behalf of,

Dennis De Rango
Specialized Services Team Lead, Real Estate Department
Hydro One Networks Inc.
Tel: (905)946-6237

Email: Dennis.DeRango@HydroOne.com

This email and any attached files are privileged and may contain confidential information intended only for the person or persons named above. Any other distribution, reproduction, copying, disclosure, or other dissemination is strictly prohibited. If you have received this email in error, please notify the sender immediately by reply email and delete the transmission received by you. This statement applies to the initial email as well as any and all copies (replies and/or forwards) of the initial email

CANADA POST / POSTES CANADA
From anywhere... to anyone / De partout... jusqu'à vous

December 21, 2018

Bourgon & Lavigne Development Inc

Claire Lemay
Municipal Planner
Clarence-Rockland

Thank you for contacting Canada Post regarding the Proposed Draft Plan of Subdivision Part Lot 21 Concession 10.

Please see Canada Post's feedback regarding the proposal, below.

Service type and location

1. Canada Post will provide mail delivery service to the subdivision through centralized Community Mail Boxes (CMBs).
2. Given the number of changes in the layout of the lots in the subdivision, we have determined the amounts of **1** site(s). **We proposed an additional CMB location beside lot 12 (see illustration), additional gravel or culvert if required, will need to be provided by the developer.**

Municipal requirements

1. Please update our office if the project description changes so that we may determine the impact (if any).
2. Should this subdivision application be approved, please provide notification of the new civic addresses as soon as possible.

Developer timeline and installation

1. Please provide Canada Post with the excavation date for the first foundation/first phase as well as the date development work is scheduled to begin. Finally, please provide the expected installation date(s) for the CMB(s,

Regards,

Daniel Bedard
PO Box 8037, Ottawa T
Ottawa, Ontario
K1G 3H6
Cell: 613-899-2566

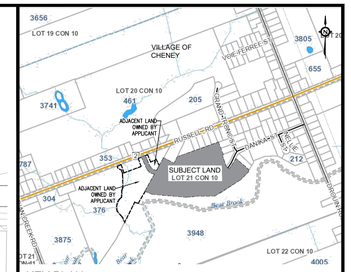

KEY PLAN
SCALE: 1:15 000

DRAWING TITLE:
PROPOSED DRAFT PLAN OF SUBDIVISION

PROJECT:
BOURGON & LAVIGNE SUBDIVISION
PART OF LOT 21 CONCESSION 10
GEOGRAPHIC TOWNSHIP OF CLARENCE
CITY OF CLARENCE-ROCKLAND

APPLICANT:
DEVELOPPEMENT BOURGON AND LAVIGNE DEVELOPMENT INC.

LEGEND:

- LOT FABRIC LINES
- EXISTING SHORELINE
- SUBDIVISION BOUNDARY
- PROPERTY OWNED BY APPLICANT
- EXISTING PROPERTY LINES
- FISH HABITAT SETBACK
- SLOPE STABILITY SETBACK
- 100YR FLOOD LINE (ELEV. 56.00m)
- EXISTING OUTER EDGE OF WOODLAND
- 1m CONTOUR LINE
- EDGE OF EXISTING ASPHALT AND DRIVEWAY
- EDGE OF PROPOSED ASPHALT
- LOT DIVISION LINE FOR SEMI-DETACHED LOTS
- PROPOSED DWELLING
- XXXX — PROPOSED LOT AREA (m²)
- PROPOSED LOCATION OF NEW SEPTIC SYSTEM W/ SPARE
- H — EXISTING DWELLING
- S — EXISTING SHED
- G — EXISTING GARAGE

20m 10 0 20 40m
SCALE: 1:1000

SURVEYOR'S CERTIFICATE

I HERBY CERTIFY THAT THE BOUNDARIES OF THE LANDS TO BE SUBDIVIDED AND THEIR RELATIONSHIP TO ADJACENT LAND ARE CORRECTLY SHOWN.

Nov. 5th 2018
DATED

DENIS DUTRISAC
ONTARIO LAND SURVEYOR
ROCKLAND ONTARIO

OWNER'S CERTIFICATE

I HERBY AUTHORIZED LASCELLES ENGINEERING AND ASSOCIATES TO PREPARE AND SUBMIT THIS PLAN TO THE CITY OF CLARENCE-ROCKLAND FOR REVIEW AND APPROVAL.

5/16/18
DATED

DEVELOPPEMENT BOURGON & LAVIGNE DEVELOPMENT INC.
MR. JACQUES BOURGON, PRESIDENT
I HAVE THE AUTHORITY TO BIND THE CORPORATION

5/11/18
DATED

DEVELOPPEMENT BOURGON & LAVIGNE DEVELOPMENT INC.
MR. RENE LAVIGNE, SECRETARY-TREASURER
I HAVE THE AUTHORITY TO BIND THE CORPORATION

LASCELLES
ENGINEERING & ASSOCIATES
870 JAMES STREET
HAWKESBURY ONTARIO
K6A 2W8
OFFICE: (613) 632-0241
FAX: (613) 632-1669

LAND USE ANALYSIS

NUMBER OF SINGLE-FAMILY LOTS: 19
NUMBER OF SEMI-DETACHED LOTS: 20
TOTAL AREA OF PROPOSED LOTS OF SUBDIVISION: 9.20 (Ha)

ADDITIONAL INFORMATION AS REQUIRED UNDER SECTION 50.1-17 OF THE PLANNING ACT. R.S.O., 1990

A. THE BOUNDARIES OF THE LAND TO BE SUBDIVIDED ARE CERTIFIED BY DENIS DUTRISAC, O.L.S, OF THE FIRM ARPENTAGE DUTRISAC SURVEYING INC.
B. THE LOCATIONS, WIDTHS AND NAMES OF THE PROPOSED STREETS WITHIN THE PROPOSED SUBDIVISION AND THE STREETS ON WHICH THE SUBDIVISION ABUTS ARE SHOWN ON THE PLAN.
C. THE KEY PLAN ILLUSTRATES THAT THE APPLICANT OWNS ADJACENT LAND. THE KEY PLAN ALSO ILLUSTRATES EVERY ADJACENT SUBDIVISION, THE EXISTING STREET CONFIGURATION IN THE VICINITY OF THE PROPOSED SUBDIVISION, AND THE RELATIONSHIP OF THE SUBJECT LAND WITH THE ADJACENT LOT FABRIC OF THE VILLAGE OF CHENEY, ONTARIO.
D. THE PURPOSE OF THIS PROPOSED SUBDIVISION IS TO CREATE RESIDENTIAL LOTS.
E. THE EXISTING USES OF ALL ADJACENT LAND IS SHOWN ON THE PLAN.
F. THE APPROXIMATE DIMENSIONS AND LAYOUT OF THE PROPOSED LOTS ARE SHOWN ON THE PLAN.
G. ALL NATURAL AND ARTIFICIAL FEATURES WITHIN AND ADJACENT TO THE LAND PROPOSED TO BE SUBDIVIDED ARE SHOWN ON THE PLAN.
H. DOMESTIC WATER WILL BE PROVIDED TO THE PROPOSED SUBDIVIONS BY AN EXISTING AND AVAILABLE MUNICIPAL WATERMAIN.
I. THE SURFICIAL OVERBURDEN SOIL UNDERLYING THE PROPOSED SUBDIVISION CONSIST OF A THIN LAYER OF SAND OVERLYING A THICK CLAY DEPOSIT.
J. EXISTING CONTOURS LINE OF THE LAND'S TOPOGRAPHY WITHIN AND ADJACENT TO THE PROPOSED SUBDIVISION ARE SHOWN ON THE PLAN. THESE WERE DERIVED FROM AERIAL PHOTOGRAPHY AND DIGITALISED USING PHOTOGRAMMETRIC METHODS BY THE BASE MAPPING CO. LTD.
K. MUNICIPAL WATER AND STORM SEWERS ARE AVAILABLE TO SERVICE THE PROPOSED SUBDIVISION ALONG WITH GARBAGE COLLECTION AND DISPOSAL. OTHER PUBLIC SERVICES AVAILABLE INCLUDE ELECTRICITY, CABLE AND NATURAL GAS.
L. THE AREA TO THE SOUTH OF THE PROPOSED SUBDIVISION HAS BEEN DESIGNATED AS FLOOD PLAIN AND HAVING SENSITIVE SLOPES. THE REQUIRED SETBACKS ARE SHOWN ON THE PLAN.

File Location: Y:\PROJECTS\2017 - PROJECTS\170126 - Jacques Bourgon\4-Drawings\Civil\Draft Plan\170126 - Draft Plan - signed.dwg (SP-1)

Club Optimiste Clarence Creek Inc.
Clarence Creek, Ontario, K0A 1N0

21 janvier 2019

Cité Clarence-Rockland
1560 rue Laurier,
Rockland, (Ontario)
K4K 1P7

Objet: Demande de festival communautaire

A qui de droit,

Le club Optimiste de Clarence Creek organise encore cette année le tournoi de hockey des familles. Cette année, le tournoi aura lieu du 28 au 31 mars 2019, inclusivement à l'aréna de Clarence Creek.

Comme par les années passées, nous aimerions que cet événement soit reconnu comme étant un festival communautaire afin de pouvoir obtenir un permis d'occasion spéciale pour la durée du tournoi auprès de la Régie des alcools de l'Ontario.

Si vous avez des questions ou commentaires, vous pouvez me contacter au (613) 488-2502. Je vous remercie de l'attention que vous apporterez à notre demande.

Mes Salutations.

Philippe Saumure

Club Optimiste Clarence Creek Inc.

AMI DE LA JEUNESSE

Clarence-Rockland

REPORT N° FIN 2019-002

Date	23/01/2019
Submitted by	Frédéric Desnoyers
Subject	2019 Budget adoption
File N°	F05 GEN Budget & Estimates

1) **NATURE/GOAL :**
Following public consultation and detailed review of the draft 2019 budget, this report recommends that Council formally approve the 2019 Budget which includes the revisions made during the Committee of the Whole budget process

2) **DIRECTIVE/PREVIOUS POLICY :**
The Municipal Act, 2001, as amended requires that every municipality adopt an annual operating and a capital budget; property tax bylaws cannot be passed until both budgets have been adopted. Under the Act, municipalities are not allowed to budget for a deficit.

3) **DEPARTMENT'S RECOMMENDATION :**
BE IT RESOLVED THAT By-law No. 2019-xx, being a by-law to establish the budget estimates for the year 2019, be approved.

QU'IL SOIT RÉSOLU QUE le Règlement no. 2019-xx, visant à établir les estimé budgétaire pour l'année 2019, soit adopté.

4) **BACKGROUND :**
N/A

5) **DISCUSSION :**
On December 17, 2018, the 2019 draft Operating Budget was presented to Council representing a 10.18% tax increase. Following the review and consideration of the 2018 draft budget, Committee of the Whole is recommending to Council a 3.51% tax increase. Please see Schedule "A" for the detailed adjustments. The draft 2019 Capital Budget was presented at $12.7 million following Committee of the Whole review the draft Capital is at $9.3 million. See Schedule "B" for the detailed adjustments.

6) **CONSULTATION:**
The 2019 draft budget was tabled at the Council meeting of December 17, 2018. Committee of the Whole met on the following dates to receive comments from the public and review the budget:

- January 15, 2019
- January 16, 2019
- January 17, 2019

- January 22, 2019

Formal notice of the budget review meetings was placed in the Vision Newspaper.

The budget documents were posted on the City's website. A mailbox Budget@Clarence-Rockland.com was established for public input into the budget process.

7) **RECOMMENDATIONS OR COMMENTS FROM COMMITTEE/ OTHER DEPARTMENTS :**
As included in this report.

8) **FINANCIAL IMPACT (expenses/material/etc.):**
As included in this report.

Average Ratepayer in Clarence-Rockland for 2019				
Bill	2018	2019	$ Diff.	%
Property taxes (City portion) – average home assessed at $293,500	$1,902	$1,969	$67	3.51
Water/ sewer – 165 M³ per year	796	818	22	3.0
Waste service	187.5	187.50	$0	0

9) **LEGAL IMPLICATIONS :**
N/A

10) **RISK MANAGEMENT :**
N/A

11) **STRATEGIC IMPLICATIONS :**
Approval of the annual budget prior to the beginning of the year allows staff to get the tender process started over the winter months.

12) **SUPPORTING DOCUMENTS:**
- Operating Changes (Schedule A to report)
- Capital Changes (Schedule B to report)

- Proposed By-Law 2019-XX
- Proposed By-law Schedules A & B
    - 2019 Operating & Capital Budget

CORPORATION OF THE CITY OF CLARENCE-ROCKLAND

BY-LAW 2019-09

BEING A BY-LAW TO ADOPT THE BUDGET ESTIMATES FOR THE YEAR 2019

WHEREAS, section 290 of the *Municipal Act, 2001, C.25* provides that the local municipality shall in each year prepare and adopt a budget including estimates of all sums required during the year.

NOW THEREFORE BE IT ENACTED by the Council of the Corporation of the City of Clarence-Rockland that:

1. The estimates of expenditure to be incurred by the City of Clarence-Rockland during the year 2019 shall be as set forth in Schedule "A" Operating and Schedule "B" Capital attached to this By-Law and forming part of this By-Law.

2. This By-Law shall come into force on the final passing thereof.

READ AND ADOPTED IN OPEN COUNCIL THIS 4th DAY OF FEBRUARY, 2019.

_____ _____

GUY DESJARDINS, MAYOR MONIQUE OUELLET, CLERK

Cité de / City of Clarence-Rockland

2019 Budget 2019

Sommaire revenus et dépenses / Summary revenue and expenses

	FIN D'ANNÉE 2017 / 2017 YEAR END	BUDGET 2018 / 2018 BUDGET	BUDGET 2019 / 2019 BUDGET	VARIANCE $	VARIANCE %
Revenu / Revenue					
Revenues et dépenses corporatifs / Corporate Revenue and Expense	23,136,485	23,860,904	24,972,113	1,111,209	0.00%
Conseil / City Council	-	-	-	-	0.00%
Bureau de la Directrice générale / Chief Administrative Officer	5,982	101,600	-	- 101,600	0.00%
Finances / Finance	66,051	158,695	130,195	- 28,500	0.00%
Service de la protection / Protective Services	327,888	127,790	232,390	104,600	81.85%
Services communautaires / Community Services	749,628	539,628	660,411	120,783	22.38%
Services de garderie / Day Care Services	4,988,147	5,408,660	5,580,970	172,310	3.19%
Transport en commun / Public Transit	1,325,789	1,372,100	772,730	- 599,370	-43.68%
Infrastructure et aménagement / Infrastructure and Planning	2,496,806	831,775	803,201	- 28,574	-3.44%
Bibliothèque/ Public Library	283,915	163,096	172,546	9,450	5.79%
Sous-total supporté par les taxes / Subtotal tax-supported	33,380,691	32,564,248	33,324,556	760,308	2.33%
Services d'eau / Water Services	2,939,195	3,134,533	3,398,223	263,690	8.41%
Services d'égouts / Sewer Services	2,233,359	2,283,071	2,407,774	124,703	5.46%
Services de déchets / Waste Services	2,516,688	2,447,612	2,716,448	268,836	10.98%
Revenu total / Total revenue $	**41,069,933 $**	**40,429,464 $**	**41,847,001 $**	**1,417,537**	
Dépenses / Expenses					
Revenues et dépenses corporatifs / Corporate Revenue and Expense	5,073,323	6,249,035	6,853,345	604,310	9.67%
Conseil / City Council	342,214	355,968	391,660	35,692	10.03%
Bureau de la Directrice générale / Chief Administrative Officer	1,360,704	1,731,306	1,709,648	- 21,658	-1.25%
Finances / Finance	1,619,969	1,894,107	1,884,523	- 9,584	-0.51%
Service de la protection / Protective Services	5,743,627	5,660,007	5,869,525	209,518	3.70%
Services communautaires / Community Services	3,497,792	2,921,803	3,387,856	466,053	15.95%
Services de garderie / Day Care Services	5,437,999	5,493,205	5,683,609	190,404	3.47%
Transport en commun / Public Transit	1,824,591	1,819,100	951,730	- 867,370	-47.68%
Infrastructure et aménagement / Infrastructure and Planning	7,521,792	5,615,479	5,674,647	59,168	1.05%
Bibliothèque / Public Library	963,010	824,238	918,013	93,775	11.38%
Sous-total supporté par les taxes / Subtotal tax-supported	33,385,021	32,564,248	33,324,556	760,308	2.33%
Services d'eau / Water Services	3,944,013	3,134,533	3,398,223	263,690	8.41%
Services d'égouts / Sewer Services	2,138,998	2,283,071	2,407,774	124,703	5.46%
Services déchets / Waste Services	2,530,053	2,447,612	2,716,448	268,836	10.98%
Dépenses totales / Total expenses $	**41,998,086 $**	**40,429,464 $**	**41,847,001 $**	**1,417,537**	
Net taxation $	**928,152 -$**	**0 $**	**- $**	**0**	

Cité de / City of Clarence-Rockland
Budget 2019

Sommaire revenus et dépenses corporatifs/ Summary corporate revenues and expenses

	FIN D'ANNÉE 2017 / 2017 YEAR END	BUDGET 2018 / 2018 BUDGET	BUDGET 2019 / 2019 BUDGET	VARIANCE AMOUNT	VARIANCE %
Revenu / Revenue					
Revenus de taxes / Taxation Revenue	18,835,936	19,670,630	20,726,127	1,055,497	5.4%
Amendes / Fines	245,325	255,100	262,605	7,505	2.9%
Subventions / Grants	1,414,432	1,411,974	1,411,974	0	0.0%
Pénalités et intérêts sur les taxes / Penalties and interest on Taxes	485,099	430,000	380,000	-50,000	-11.6%
Revenus d'investissements / Investment Income	211,294	120,000	131,370	11,370	9.5%
Autres revenus / Other Income	172,516	192,100	164,000	-28,100	-14.6%
Contribution des réserves / Contribution from reserves	0	0	50,000	50,000	#DIV/0!
Utilisation des équipements / Equipment usage	576,600	562,600	562,600	0	0.0%
Drainage municipal / Municipal Drainage	22,883	22,500	22,500	0	0.0%
Soutien de programmes / Program Support	1,172,400	1,196,000	1,260,937	64,937	5.4%
Revenu total / Total revenue	**$ 23,136,485**	**$ 23,860,904**	**$ 24,972,113**	**$ 1,111,209**	**4.7%**
Dépenses / Expenses					
Soutien de programmes / Program Support	503,592	513,700	523,850	10,150	2.0%
Contribution aux réserves / Contribution to reserves	3,102,854	3,056,403	3,423,860	367,457	12.0%
Assurances / Insurance	213,527	238,500	238,500	0	0.0%
Transferts externes / External Transfers	143,042	130,000	130,000	0	0.0%
Paiements de la dette / Debt Payments	289,197	1,662,532	1,732,933	70,401	4.2%
Utilisation de l'équipement / Equipment usage	502,900	502,900	502,900	0	0.0%
CSPAAT/ WSIB	122,808	0	75,000	75,000	100.0%
Contingence / Contingency	139,703	100,000	181,302	81,302	81.3%
Drainage municipal / Municipal Drainage	55,700	45,000	45,000	0	0.0%
Dépenses totales / Total expenses	**$ 5,073,323**	**$ 6,249,035**	**$ 6,853,345**	**$ 604,310**	**9.7%**
NET CORPORATIF / NET CORPORATE	**-$ 18,063,162**	**-$ 17,611,869**	**-$ 18,118,768**	**-$ 506,899**	**2.9%**

Cité de / City of Clarence-Rockland
Budget 2019

Sommaire conseil - Summary Council

	FIN D'ANNÉE 2017 / 2017 YEAR END	BUDGET 2018 / 2018 BUDGET	BUDGET 2019 / 2019 BUDGET	VARIANCE $	VARIANCE %
Revenu / Revenue					
Conseil / Council	0	0	0	0	0.0%
Revenu total / Total revenue	**$ -**	**$ -**	**$ -**	**$ -**	**0.0%**
Dépenses / Expenses					
Conseil / Council	342,214	355,968	391,660	35,692	10.0%
Dépenses totales / Total expenses	**$ 342,214**	**$ 355,968**	**$ 391,660**	**$ 35,692**	**10.0%**
Net	**$ 342,214**	**$ 355,968**	**$ 391,660**	**$ 35,692**	**10.0%**

Cité de / City of Clarence-Rockland
Budget 2019

Sommaire bureau du directrice générale/ Summary Chief Administrative Office

	FIN D'ANNÉE 2017 / 2017 YEAR END	BUDGET 2018 / 2018 BUDGET	BUDGET 2019 / 2019 BUDGET	VARIANCE AMOUNT	VARIANCE %
Revenu / Revenue					
Contribution de la réserve d'immobilisations / Contribution from capital reserve	5,982	0	0	0	0.0%
Élections / Elections	0	101,600	0	-101,600	-100.0%
Revenu total / Total revenue	**$ 5,982**	**$ 101,600**	**$ -**	**-$ 101,600**	0.0%
Dépenses / Expenses					
Administration de la directrice générale / CAO administration	834,991	807,902	830,035	22,133	2.7%
Élections / Elections	1,261	101,600	1,600	-100,000	-98.4%
Ressources humaines / Human Resssources	243,097	478,617	522,355	43,738	9.1%
Édifices municipaux / Municipal buildings	281,355	343,187	355,658	12,471	3.6%
Dépenses totales / Total expenses	**$ 1,360,704**	**$ 1,731,306**	**$ 1,709,648**	**-$ 21,658**	**-1.3%**
NET Directrice générale / NET Chief Administration Officer	**$ 1,354,721**	**$ 1,629,706**	**$ 1,709,648**	**$ 79,942**	**4.9%**

Cité de / City of Clarence-Rockland

Budget 2019

Sommaire finances / Summary Finance

	FIN D'ANNÉE 2017 / 2017 YEAR END	BUDGET 2018 / 2018 BUDGET	BUDGET 2019 / 2019 BUDGET	VARIANCE AMOUNT	VARIANCE %
Revenu / Revenue					
Finances / Finance	66,051	158,695	130,195	-28,500	-18.0%
Revenu total / Total revenue	**$ 66,051**	**$ 158,695**	**$ 130,195**	**-$ 28,500**	-18.0%
Dépenses / Expenses					
Finances / Finance	1,137,760	1,190,863	1,114,779	-76,084	-6.4%
Technologie de l'information / Information technology	472,263	688,244	754,744	66,500	9.7%
Développement économique / Economic development	9,947	15,000	15,000	0	0.0%
Dépenses totales / Total expenses	**$ 1,619,969**	**$ 1,894,107**	**$ 1,884,523**	**-$ 9,584**	**-0.5%**
Net	**$ 1,553,919**	**$ 1,735,412**	**$ 1,754,328**	**$ 18,916**	**1.1%**

Cité de / City of Clarence-Rockland
Budget 2019

Sommaire service de la protection/ Summary Protective Services

	FIN D'ANNÉE 2017 / 2017 YEAR END	BUDGET 2018 / 2018 BUDGET	BUDGET 2019 / 2019 BUDGET	VARIANCE AMOUNT	VARIANCE %
Incendie/ Fire					
Revenu / Revenue					
Administration - Incendie / Fire - Administration	206,697	31,500	52,360	20,860	66.2%
Centre de formation régional / Regional Training Centre	0	0	80,000	80,000	100.0%
Revenu total / Total revenue	**$ 206,697**	**$ 31,500**	**$ 132,360**	**$ 100,860**	**320.2%**
Dépenses / Expenses					
Incendie/ Fire					
Administration - Incendie / Fire - Administration	419,760	447,746	477,597	29,851	6.7%
Combat d'incendies / Fire Fighting	803,413	717,564	759,430	41,866	5.8%
Formation contre les incendies / Fire Training	153,076	130,646	179,187	48,541	37.2%
Casernes de pompiers / Fire Halls	73,072	69,268	68,822	-446	-0.6%
Véhicules pour combattre les incendies / Fire Vehicles	140,510	141,500	141,500	0	0.0%
Éducation pour la prévention des incendies / Fire Prevention Education	263,107	182,756	161,770	-20,986	-11.5%
Événements spéciaux / Fire Special Events	14,270	0	0	0	0.0%
Gestion pour les situations d'urgence / Emergency Management	17,639	5,000	15,000	10,000	200.0%
Centre de formation régional / Regional Training Centre	0	0	80,000	80,000	100.0%
Dépenses totales / Total expenses	**$ 1,884,846**	**$ 1,694,480**	**$ 1,883,306**	**$ 188,826**	**11.1%**
Net Feu/ Fire	**$ 1,678,149**	**$ 1,662,980**	**$ 1,750,946**	**$ 87,966**	5.3%

Cité de / City of Clarence-Rockland
Budget 2019

Sommaire service de la protection/ Summary Protective Services

	FIN D'ANNÉE 2017 / 2017 YEAR END	BUDGET 2018 / 2018 BUDGET	BUDGET 2019 / 2019 BUDGET	VARIANCE AMOUNT	VARIANCE %
Police					
Police	3,286,450	3,385,263	3,413,163	27,900	0.8%
Net Police/ Police	**$ 3,286,450**	**$ 3,385,263**	**$ 3,413,163**	**$ 27,900**	**0.8%**
Reglementation / By Law					
Revenu - Reglementation / Revenue - By law	121,191	96,290	100,030	3,740	3.9%
Expenses - By law	572,331	580,264	573,056	-7,208	-1.2%
Net Reglementation/ By law	**$ 451,140**	**$ 483,974**	**$ 473,026**	**-$ 10,948**	-2.3%
NET SERVICE DE LA PROTECTION / PROTECTIVE SERVICES	**$ 5,415,739**	**$ 5,532,217**	**$ 5,637,135**	**$ 104,918**	**1.9%**

Cité de / City of Clarence-Rockland

Budget 2019

Sommaire infrastructure et aménagement du territoire / Summary Infrastructure and Planning

	FIN D'ANNÉE 2017 / 2017 YEAR END	BUDGET 2018 / 2018 BUDGET	BUDGET 2019 / 2019 BUDGET	VARIANCE $	VARIANCE %
INFRASTRUCTURE					
Revenu / Revenue					
Administration	-106,449	108,100	18,100	-90,000	-83.3%
Égouts pluviaux / Storms sewers	1,388,755	0	0	0	0.0%
Programme hivernal / Winter control	60,000	0	0	0	0.0%
Véhicules / Vehicles	53,471	54,700	54,700	0	0.0%
Revenu total / Total revenue	**$ 1,395,777**	**$ 162,800**	**$ 72,800**	**-$ 90,000**	**-55.3%**
Dépenses / Expenses					
Adminstration	1,099,844	1,352,256	1,275,008	-77,248	-5.7%
Chemins / Roads	460,689	425,600	453,100	27,500	6.5%
Entretien routier / Roadside maintenance	677,515	515,147	552,147	37,000	7.2%
Chemins de gravier / Gravel roads	598,661	555,000	555,000	0	0.0%
Égouts pluviaux / Storms sewers	1,727,129	195,600	195,600	0	0.0%
Programme hivernal / Winter control	953,887	816,346	666,346	-150,000	-18.4%
Véhicules / Vehicles	827,809	796,477	830,333	33,856	4.3%
Dépenses totales / Total expenses	**$ 6,345,535**	**$ 4,656,426**	**$ 4,527,534**	**-$ 128,892**	**-2.8%**
NET INFRASTRUCTURE	**$ 4,949,757**	**$ 4,493,626**	**$ 4,454,734**	**-$ 38,892**	**-0.9%**
AMÉNAGEMENT DU TERRITOIRE / PLANNING					
Revenu / Revenue	456,266	228,000	228,355	355	0.2%
Dépenses / Expense	529,785	518,078	645,067	126,989	24.5%
NET PLANNING	**$ 73,519**	**$ 290,078**	**$ 416,712**	**$ 126,634**	**43.7%**
CONSTRUCTION					
Revenu / Revenue	644,762	440,975	502,046	61,071	13.8%
Dépenses / Expenses	646,472	440,975	502,046	61,071	13.8%
NET CONSTRUCTION	**$ 1,710**	**$ -**	**$ -**	**$ -**	**0.0%**
NET INFRASTRUCTURE AND PLANNING	**$ 5,024,986**	**$ 4,783,704**	**$ 4,871,446**	**$ 87,742**	**1.8%**

Cité de / City of Clarence-Rockland

Budget 2019

Sommaire services communautaires / Summary Community Services

	FIN D'ANNÉE 2017 / 2017 YEAR END	BUDGET 2018 / 2018 BUDGET	BUDGET 2019 / 2019 BUDGET	VARIANCE $	VARIANCE %
Revenu / Revenue					
Administration				-	0.0%
Relations communautaires / Community Relation	26,302	25,000	72,128	47,128	188.5%
Programmes externes / External Programs	130,410	100,300	150,300	50,000	49.9%
Centres communautaires / Community Centres	19,095	8,690	8,690	0	0.0%
Installations culturelles / Cultural Facilities	10,609	7,185	8,240	1,055	14.7%
Installations récréatives / Recreation Facilities	530,375	372,053	373,753	1,700	0.5%
Parcs / Parks	32,837	26,400	47,300	20,900	79.2%
Revenu total / Total revenue	**$ 749,628**	**$ 539,628**	**$ 660,411**	**$ 120,783**	**22.4%**
Dépenses / Expenses					
Administartion	976,941	956,237	925,179	-31,058	-3.2%
Relations communautaires / Community Relation	584,074	411,254	579,937	168,683	41.0%
Programmes externes / External Programs	178,617	171,567	231,042	59,475	34.7%
Centres communautaires / Community Centres	127,698	100,968	105,267	4,299	4.3%
Installations culturelles / Cultural Facilities	42,052	31,475	33,746	2,271	7.2%
Installations récréatives / Recreation Facilities	1,166,921	832,799	1,059,230	226,431	27.2%
Parcs / Parks	421,490	417,503	453,455	35,952	8.6%
Dépenses totales / Total expenses	**$ 3,497,792**	**$ 2,921,803**	**$ 3,387,856**	**$ 466,053**	**16.0%**
NET SERVICES COMMUNAUTAIRES / COMMUNITY SERVICES	**$ 2,748,164**	**$ 2,382,175**	**$ 2,727,445**	**$ 345,270**	**14.5%**

Cité de / City of Clarence-Rockland
Budget 2019

Sommaire garderies / Summary Daycare

	FIN D'ANNÉE 2017 / 2017 YEAR END	BUDGET 2018 / 2018 BUDGET	BUDGET 2019 / 2019 BUDGET	VARIANCE AMOUNT	VARIANCE %
Revenu / Revenue					
Administration	316,511	295,500	295,500	0	0.0%
Carrousel	329,028	0	0	0	0.0%
Carrefour Jeunesse	676,556	1,040,667	927,626	-113,041	-10.9%
St Patrick	339,372	615,507	602,671	-12,836	-2.1%
Rockland Public	228,889	216,107	232,148	16,041	7.4%
St Mathieu	551,103	657,830	727,132	69,302	10.5%
Ste Félicité	439,319	407,871	429,724	21,853	5.4%
Sacre Cœur	297,650	326,249	372,116	45,867	14.1%
St Pascal	64,744	62,459	67,762	5,303	8.5%
Ste Trinité	1,563,105	1,588,840	1,728,661	139,821	8.8%
Besoins particuliers / Special Needs	181,872	197,630	197,630	0	0.0%
Revenu total / Total revenue	**$ 4,988,147**	**$ 5,408,660**	**$ 5,580,970**	**$ 172,310**	**3.2%**
Dépenses / Expenses					
Administration	340,886	412,196	411,856	-340	-0.1%
Carrousel	497,105	0	0	0	0.0%
Carrefour Jeunesse	789,549	1,005,427	948,042	-57,385	-5.7%
St Patrick	363,512	588,744	637,594	48,850	8.3%
Rockland Public	248,299	247,605	226,646	-20,959	-8.5%
St Mathieu	536,345	540,378	704,459	164,081	30.4%
Ste Félicité	518,936	565,214	508,214	-57,000	-10.1%
Sacre Cœur	289,050	282,807	301,062	18,255	6.5%
St Pascal	46,521	48,568	50,210	1,642	3.4%
Ste Trinité	1,631,328	1,604,636	1,694,375	89,739	5.6%
Besoins particuliers / Special Needs	176,467	197,630	201,151	3,521	1.8%
Dépenses totales / Total expenses	**$ 5,437,999**	**$ 5,493,205**	**$ 5,683,609**	**$ 190,404**	**3.5%**
NET GARDERIES / DAYCARE	**$ 449,851.88**	**$ 84,545.00**	**$ 102,639.00**	**$ 18,094**	**21.4%**

Cité de / City of Clarence-Rockland
Budget 2019

Sommaire transport en commun / Summary Transit

	FIN D'ANNÉE 2017 / 2017 YEAR END	BUDGET 2018 / 2018 BUDGET	BUDGET 2019 / 2019 BUDGET	VARIANCE AMOUNT	VARIANCE %
Revenu / Revenue					
Transport en commun / Transit	1,325,789	1,372,100	772,730	-599,370	-43.7%
Revenu total / Total revenue	**$ 1,325,789**	**$ 1,372,100**	**$ 772,730**	**-$ 599,370**	**-43.7%**
Dépenses / Expenses					
Transport en commun / Transit	1,824,591	1,819,100	951,730	-867,370	-47.7%
Dépenses totales / Total expenses	**$ 1,824,591**	**$ 1,819,100**	**$ 951,730**	**-$ 867,370**	**-47.7%**
NET TRANSPORT EN COMMUN / TRANSIT	**$ 498,802**	**$ 447,000**	**$ 179,000**	**-$ 268,000**	**-60.0%**

Cité de / City of Clarence-Rockland
Budget 2019

Sommaire Bibliothèque publique / Summary Public Library

	FIN D'ANNÉE 2017 / 2017 YEAR END	BUDGET 2018 / 2018 BUDGET	BUDGET 2019 / 2019 BUDGET	VARIANCE AMOUNT	VARIANCE %
Revenu / Revenue					
Revenus / Revenues	283,915	163,096	172,546	9,450	5.8%
Revenu total / Total revenue	**$ 283,915**	**$ 163,096**	**$ 172,546**	**$ 9,450**	**5.8%**
Dépenses / Expenses					
Salaires et bénéfices / Salaries and benefits	548,897	548,631	598,631	50,000	9.1%
Matériaux / Materials	360,073	221,570	241,571	20,001	9.0%
Contrats / Contracts	43,335	43,137	45,861	2,724	6.3%
Contribution aux réserves / Contribution to reserves	0	0	20,850	20,850	100.0%
Coûts d'administration / Admin. costs	10,704	10,900	11,100	200	1.8%
Dépenses totales / Total expenses	**$ 963,010**	**$ 824,238**	**$ 918,013**	**$ 93,775**	**11.4%**
NET	**$ 679,095**	**$ 661,142**	**$ 745,467**	**$ 84,325**	**12.8%**

Cité de / City of Clarence-Rockland
Budget 2019

Sommaire Services d'eau / Summary Water Services

	FIN D'ANNÉE 2017 / 2017 YEAR END	BUDGET 2018 / 2018 BUDGET	BUDGET 2019 / 2019 BUDGET	VARIANCE AMOUNT	VARIANCE %
Revenu / Revenue					
Taux fixe / Fixed rate	1,072,783	1,120,004	1,207,329	87,325	7.8%
Taux mesurés au compteur / Metered rate	1,485,905	1,479,263	1,537,167	57,904	3.9%
Autres revenu / Other revenue	380,506	535,266	653,727	118,461	22.1%
Revenu total / Total revenue	**$ 2,939,195**	**$ 3,134,533**	**$ 3,398,223**	**$ 263,690**	**8.4%**
Dépenses / Expenses					
Coûts d'opérations / Operating costs	3,258,689	2,550,957	3,172,422	621,465	24.4%
Contribution aux réserves / Contribution to reserves	685,324	583,576	225,801	- 357,775	-61.3%
Dépenses totales / Total expenses	**$ 3,944,013**	**$ 3,134,533**	**$ 3,398,223**	**$ 263,690**	**8.4%**
NET	**$ 1,004,818**	**$ -**	**$ -**	**$ -**	**0.0%**

Cité de / City of Clarence-Rockland
Budget 2019

Sommaire Services d'égout / Summary Sewer Services

	FIN D'ANNÉE 2017 / 2017 YEAR END	BUDGET 2018 / 2018 BUDGET	BUDGET 2019 / 2019 BUDGET	VARIANCE AMOUNT	VARIANCE %
Revenu / Revenue					
Taux fixe / Fixed rate	780,175	825,705	879,085	53,380	6.5%
Taux mesurés au compteur / Metered rate	1,411,547	1,421,280	1,492,603	71,323	5.0%
Autres revenu / Other revenue	41,638	36,086	36,086	-	0.0%
Revenu total / Total revenue	**$ 2,233,359**	**$ 2,283,071**	**$ 2,407,774**	**$ 124,703**	**5.5%**
Dépenses / Expenses					
Coûts d'opérations / Operating costs	2,004,670	1,664,736	2,041,574	376,838	22.6%
Contribution aux réserves / Contribution to reserves	134,328	618,335	366,200	- 252,135	-40.8%
Dépenses totales / Total expenses	**$ 2,138,998**	**$ 2,283,071**	**$ 2,407,774**	**$ 124,703**	**5.5%**
NET	**-$ 94,361**	**$ -**	**$ -**	**$ -**	**0.0%**

Cité de / City of Clarence-Rockland
Budget 2019

Sommaire Services déchets / Summary Waste Services

	FIN D'ANNÉE 2017 / 2017 YEAR END	BUDGET 2018 / 2018 BUDGET	BUDGET 2019 / 2019 BUDGET	VARIANCE AMOUNT	VARIANCE %
Revenu / Revenue					
Résidentiel / Residential	1,767,567	1,771,875	1,785,750	13,875	0.8%
Commerciale / Commercial	187,579	203,957	307,990	104,033	51.0%
Autres revenus / Other revenue	561,543	471,780	622,708	150,928	32.0%
Revenu total / Total revenue	**$ 2,516,688**	**$ 2,447,612**	**$ 2,716,448**	**$ 268,836**	**11.0%**
Dépenses / Expenses					
Coûts d'opérations / Operating costs	2,430,053	2,358,205	2,591,161	232,956	9.9%
Contribution aux réserves / Contribution to reserves	100,000	89,407	125,287	35,880	40.1%
Dépenses totales / Total expenses	**$ 2,530,053**	**$ 2,447,612**	**$ 2,716,448**	**$ 268,836**	**11.0%**
NET	**$ 13,365**	**$ -**	**$ -**	**$ -**	**0.0%**

Cité de / City of Clarence-Rockland
Budget 2019
Budget d'immobilisations 2019/ 2019 Capital Budget

		Titre / Title	Total $	Croissance Growth	Fonds reserves Reserve funds	Octroies Grant	Other/ Surplus	Dette / Debt Tax
		Services communautaires/ Community Services						
1		Hôtel de ville Clarence Creek - fenêtres Clarence Creek City Hall - windows	30,000	0	30,000	0	0	0
2		Hôtel de ville Clarence Creek, Salle serveur- système d'extinction des feux Clarence Creek City Hall, IT server room - fire extinguishing system	25,000	0	25,000	0	0	0
3		Salle communautaire Clarence Creek - marches pour la sortie d'urgence Clarence Creek community hall - emergency stairs	35,000	0	35,000	0	0	0
4		Aréna de Clarence Creek - lobby d'entrée plancher Clarence Creek - entrance hall flooring	60,000	0	60,000	0	0	0
5		Tous les édifices - conception et impression des plans d'évacuation d'urgence All buildings - design and printing of all the emergency evacuation plans	15,000	0	15,000	0	0	0
6		Centre communautaire de Hammond et abri - toiture Hammond Community Center and shelter - roofing	20,000	0	20,000	0	0	0
7		Garage Services communautaire - plans et devis Community Services garage - design and tender	25,000	0	25,000	0	0	0
8		Parcs - tables et bancs Parks - tables & benches	12,500	0	12,500	0	0	0
9		Terrain de balle de St-Pascal - panneau électrique St-Pascal baseball field - electrical panel	15,000	0	15,000	0	0	0
10		Terrain de tennis à Hammond - clôture Hammond tennis court - fencing	15,000	0	15,000	0	0	0
11		Parc Hammond - structures de jeux accessibles Hammond Park - accessible park	132,000	0	31,000	101,000	0	0
12	*	Terrain de balle Clarence Creek Clarence Creek baseball field	100,000	0	100,000	0	0	0
13		Parcs Simon - sentiers accessibles Simon parks - accessible paths	20,000	0	20,000	0	0	0
14	*	Parc Village Morris - développement du parc Village Morris Park - park Development	325,000	0	133,000	192,000	0	0
15		Parcs Richelieu Grande Rivière - bandes de patinoires Richelieu Grande Rivière - skating rink	45,000	0	45,000	0	0	0
16		Garderie St-Patrick - Aménagement de l'aire de jeu extérieur St-Patrick daycare - Outdoor playgroud landscaping	30,000	27,000	3,000	0	0	0
		Total Services communautaire/ Community Services	**904,500**	**27,000**	**584,500**	**293,000**	**0**	**0**
		Finances TI / Finances IT						
17		Espace disque pour le stockage des données Storage disk space	25,000	0	25,000	0	0	0
18		Hôtel de ville Rockland, Salle serveur- Système de climatisation de sauvegarde Rockland City Hall, IT Server room - Backup A/C	10,000	0	10,000	0	0	0
19		L'accès à distance (VPN) Remote access (VPN)	7,500	0	7,500	0	0	0
20		Assistance pour l'accès à distance TI Remote IT Assistance	5,000	0	5,000	0	0	0
21		Revue technologie de la branche d'ingénierie / Engineering branch technology review	50,000	0	50,000	0	0	0
		Total Finances / Finances	**97,500**	**0**	**97,500**	**0**	**0**	**0**
		Services de la protection / Protective services						
22		Coussins gonflables de sauvetage, contrôleur & jambes de sauvetage Rescue air bags, controller & rescue struts	30,000	0	30,000	0	0	0
23		Caméras de corps - Réglementation Body Cameras - By-Law	10,000	0	10,000	0	0	0
		Total Services de la protection / Protective services	**40,000**	**0**	**40,000**	**0**	**0**	**0**
		Bibliothèque / Library						
24		Remplacement du serveur et des pare-feux Replace Server - Firewall	12,000	0	12,000	0	0	0
25		Prolongement des étagères Shelf extension	3,000	0	3,000	0	0	0
26		Nouveaux ordinateurs New computers	3,450	0	3,450	0	0	0

*Financement aditionnel requis pour les projets en progression
Additional financing required for work in progress projects

Cité de / City of Clarence-Rockland
Budget 2019
Budget d'immobilisations 2019/ 2019 Capital Budget

		Titre / Title	Total $	Croissance Growth	Fonds reserves Reserve funds	Octroies Grant	Other/ Surplus	Dette / Debt Tax
27		Remplacement de mobilier Furniture replacement	2,400	0	2,400	0	0	0
		Total Bibliothèque / Library	**20,850**	**0**	**20,850**	**0**	**0**	**0**
		Aménagement du territoire / Planning						
28		Conception partie rue St-Jean - Docteur Corbeil a Poupart Design of part of St-Jean St from Docteur Corbeil to Poupart	400,000	360,000	40,000	0	0	0
		Total aménagement du territoire / Planning	**400,000**	**360,000**	**40,000**	**0**	**0**	**0**
		Travaux publics / Public Works						
29		Compacteur à plaque Plate Compactor	20,000	20,000	0	0	0	0
30		Remplacement remorque à benne basculante Dump box trailer replacement	15,000	0	15,000	0	0	0
31		Remplacement équipement de marquages de chaussées Pavement marking machine replacement	36,000	18,000	18,000	0	0	0
32		Remplacement charrue pour trottoir Sidewalk plow replacement	155,000	0	155,000	0	0	0
33	*	Aménagement du site pour dépotoir à neige Rockland Site development for snow disposal Rockland site	1,145,000	0	0	0	0	1,145,000
34		Aménagement du site pour élimination de la neige a Bourget Site development for snow disposal site Bourget	126,000	0	0	0	0	126,000
		Total travaux publics / Public Works	**1,497,000**	**38,000**	**188,000**	**0**	**0**	**1,271,000**
		Routes / Roads						
35		Pavage chemin Lacroix Paving Lacroix road	525,000	0	0	525,000	0	0
36		Pavage chemin Vinette Paving Vinette road	490,000	0	34,000	456,000	0	0
37		Analyses géotechniques (DuLac, Lavigne) Geotechnical investigation (DuLac, Lavigne)	40,000	0	40,000	0	0	0
38		Revêtement (Old 17, Bouvier) Scratch coat (Old 17, Bouvier)	175,000		175,000			
39		Remplacement de ponceaux (Landry) Culvert replacement program (Landry)	373,500	0	373,500	0	0	0
40		Remplacement de ponceaux (VinetteW, Vinette E) Culvert replacement program (VinetteW, Vinette E)	769,000	0	139,398	629,602	0	0
41		Remplacement de ponceaux (St-Félix, Lacasse, Bouvier,Butler) Culvert replacement program (St-Félix, Lacasse, Bouvier, Butler)	200,000	0	0	200,000	0	0
42		Remplacement du pluvial sur Lacroix Storm Water replacement Lacroix	50,000	0	50,000	0	0	0
43		Remplacement de ponceaux - chemin Boundary/Canaan mitoyen CR et Ottawa Culvert replacement - Boundary/Canaan road CR and Ottawa	150,000	0	150,000	0	0	0
44		Rodrigue Pluvial / Strom Rodrigue	87,000	0	0	87,000	0	0
45		Pavage chemin McTeer McTeer road paving	15,200	0	15,200	0	0	0
		Total Routes / Roads	**2,874,700**	**0**	**977,098**	**1,897,602**	**0**	**0**
		Véhicules /Fleet						
46		2004 Camionnette loisirs 2004 Cube van recreation	65,000	0	65,000	0	0	0
47		2010 Camion 3/4 tonne travaux publics 2010 3/4 ton pickup public works	45,000	0	45,000	0	0	0
48		2009 Véhicule de commandement VUS avec transformation 2009 Command SUV with upfit	65,000	0	65,000	0	0	0
49		Addition - Véhicule pour Réglementation - quatre roues motrices avec transformation Addition - Enforcement Car AWD with upfit	55,000	55,000	0	0	0	0
50		2000 Camion-pompe/Citerne 2000 Pumper/Tanker	580,000	0	0	0	0	580,000
51		Addition Camion service usagé - mécaniciens Addition Used service truck - Mechanics	25,000	25,000	0	0	0	0

*Financement aditionnel requis pour les projets en progression
Additional financing required for work in progress projects

Cité de / City of Clarence-Rockland
Budget 2019
Budget d'immobilisations 2019/ 2019 Capital Budget

	Titre / Title	Total $	Croissance Growth	Fonds reserves Reserve funds	Octroies Grant	Other/ Surplus	Dette / Debt Tax
52	Remplacement pelle rétrocaveuse travaux publics Backhoe replacement Public Works	160,000	0	160,000	0	0	0
	Total Véhicules /Fleet	**995,000**	**80,000**	**335,000**	**0**	**0**	**580,000**
	Égout sanitaire / Sewer						
53	Mise a jour du plan maitre des égouts sanitaire Sanitary sewer master plan upgrade	200,000	0	200,000	0	0	0
54	Rue Albert - Remplacement d'égout sanitaire Albert Street - Sanitary sewer replacement	89,000	0	89,000	0	0	0
55	Remplacement des rotors de pompe mélangeuse (3) Replacement of mixing pump impellers (3)	75,000	0	75,000	0	0	0
	Total Égout sanitaire / Sewer	**364,000**	**0**	**364,000**	**0**	**0**	**0**
	Eau / Water						
56	Rue Gareau et Pouliot - remplacement de l'aqueduc Gareau & Pouliot Street - watermain replacement	1,780,000	0	612,719	0	1,167,281	0
57	PRV aqueduc Clarence-Creek PRV waterlooping Clarence-Creek	200,000	0	200,000	0	0	0
58	Rue Wallace - conception Wallace Street - design	109,000	0	109,000	0	0	0
	Total Eau / Water	**2,089,000**	**0**	**921,719**	**0**	**1,167,281**	**0**
	Déchet / Waste						
59	Site d'enfouissement - clôture Landfill Facility - fencing	35,000	0	35,000	0	0	
	Total Déchet / Waste	**35,000**	**0**	**35,000**	**0**	**0**	**0**
	Total 2019	**9,317,550**	**505,000**	**3,603,667**	**2,190,602**	**1,167,281**	**1,851,000**

*Financement aditionnel requis pour les projets en progression
Additional financing required for work in progress projects

Schedule A

City of / Cité de Clarence-Rockland

Budget 2019

Operating budget Changes during Council Deliberations

	Department			Adjustments	Tax $'s	Tax Impact
Draft budget pressures					$ 1,984,406	10.18%
January 15, 2019						
1)	Corp Rev & Exp	To eliminate contingency for Council Salaries	1-4-1223-3998	-50,000		
2)	Council	To add impact of Council Salaries adjustment - Regular salaries	1-4-1121-1100	30,200		
	Council	To add impact of Council Salaries adjustment - EHT	1-4-1121-1210	589		
	Council	To add impact of Council Salaries adjustment - CPP	1-4-1121-1220	1,540		
3)	Community Serv.	To balance indirect salaries	1-4-7111-1103	-1,000		
4)	Community Serv.	Hydro - St-Pascal Community Centre	1-4-7493-3300	4,000		
5)	Community Serv.	Natural Gas - St-Pascal Community Centre	1-4-7493-3490	-3,200		
6)	Community Serv.	Overtime	1-4-1103-1130	-8,000		
7)	Community Serv.	Expo Clarence-Rockland	1-4-1105-3501	-2,500		
8)	Community Serv.	Grant to Meals on Wheel	1-4-7325-5520	-400		
9)	Community Serv.	Subvention, Carnaval Halloween - Bourget	1-4-7325-5520	-2,000		
10)	Community Serv.	Virtual Exhibit	1-4-7325-5530	-900		
11)	Community Serv.	Cultural and Artistic Activities Financial Assistance Program	1-4-7325-5535	-3,000		
12)	Community Serv.	Snow Removal	1-4-7514-4275	-750		
	Community Serv.	Snow Removal	1-4-7624-4275	-750		
	Community Serv.	Snow Removal	1-4-7414-4275	-1,500		
	Community Serv.	Snow Removal	1-4-7424-4275	-1,000		
	Community Serv.	Snow Removal	1-4-7484-4275	-500		
	Community Serv.	Snow Removal	1-4-7314-4275	-1,000		
	Community Serv.	Snow Removal	1-4-7254-4190	-3,500		
13)	Community Serv.	Mechanical repairs - Clarence-Creek Arena	1-4-7423-3430	-5,000		
	Community Serv.	Revenus - Organisation de spectacles	1-3-7520-0773	-50,000		
	Community Serv.	Dépenses - Organisation de spectacles	1-4-7524-4290	50,000		
14)	Community Serv.	Sport fields rental - Addition of 4% rate increase	1-3-7250-0760	-900		
	Community Serv.	Ice rental - Addition of 4% rate increase	1-3-7420-0790	-10,300		
	Community Serv.	Rink surface rental - Addition of 4% rate increase	1-3-7410-0792	-595		
	Community Serv.	Rink surface rental - Addition of 4% rate increase	1-3-7420-0792	-105		
	Corp Rev & Exp	4% rate increase allocated to Community services department	1-3-0180-0574	11,900		
					-48,671	
Sub total					$ 1,935,735	9.93%
Revised Pressures Jan 15					$ 1,935,735	9.93%
January 16, 2019						
1)	Library	Municipal share increase of $84,325 - Seasonal Employees	4-3-7150-0739	- 2,000		
	Library	Municipal share increase of $84,325 - Donations	4-3-7150-0785	- 500		
	Library	Municipal share increase of $84,325 - Interest income	4-3-7150-0566	250		
	Library	Municipal share increase of $84,325 - Late Charges	4-3-7150-0777	1,500		
	Library	Municipal share increase of $84,325 - Lost Document Charges	4-3-7150-0779	- 200		
	Library	Municipal share increase of $84,325 - Memberships	4-3-7150-0778	- 500		
	Library	Municipal share increase of $84,325 - Books	4-4-7153-3050	- 652		
	Library	Municipal share increase of $84,325 - Audio Visual Collection	4-4-7153-3022	- 4,500		
	Library	Municipal share increase of $84,325 - Periodicals	4-4-7153-3525	- 1,000		
	Library	Municipal share increase of $84,325 - Bindery and Repairs	4-4-7153-3093	- 500		
	Library	Municipal share increase of $84,325 - Computers - Hardware	4-4-7153-3152	1,000		
	Library	Municipal share increase of $84,325 - Course and Tuition Fees	4-4-7153-3175	1,500		
	Library	Municipal share increase of $84,325 - Furniture	4-4-7153-3239	2,829		
	Library	Municipal share increase of $84,325 - Hydro	4-4-7153-3300	- 1,000		
	Library	Municipal share increase of $84,325 - Internet Service Fees	4-4-7153-3316	- 1,900		
	Library	Municipal share increase of $84,325 - Mileage / Travel	4-4-7153-3450	- 2,500		
	Library	Municipal share increase of $84,325 - Natural Gas	4-4-7153-3490	- 5,000		
	Library	Municipal share increase of $84,325 - Postage, Freight, Express	4-4-7153-3550	- 250		
	Library	Municipal share increase of $84,325 - Program Expenses	4-4-7153-3570	- 3,000		

Schedule A

City of / Cité de Clarence-Rockland

Budget 2019

Operating budget Changes during Council Deliberations

	Department			Adjustments	Tax $'s	Tax Impact
	Library	Municipal share increase of $84,325 - Banking Fees	4-4-7153-3032	- 800		
	Library	Municipal share increase of $84,325 - Office supplies	4-4-7153-3500	- 927		
	Library	Municipal share increase of $84,325 - Contribution to reserves	4-4-7157-7100	- 40,150		
	Library	Municipal share increase of $84,325 - Photocopier+Internet Printing	4-3-7150-0573	- 2,700		
2)	Protective Services	Rescue extrication services revenues	1-3-2100-0620	- 20,000		
3)	Protective Services	Uniforms	1-4-2113-3755	- 3,000		
4)	Protective Services	Protective Clothing	1-4-2123-3585	- 6,000		
5)	Protective Services	Training Materials	1-4-2133-3745	- 4,000		
6)	Protective Services	Medical Director	1-4-2123-3282	- 10,000		
7)	Protective Services	Educational Materials	1-4-2213-3213	- 800		
8)	Protective Services	Training Materials	1-4-2213-3745	- 300		
9)	Protective Services	Formation et cours	1-4-2113-3175	- 9,000		
10)	Protective Services	Fire Training - Part-time Wages	1-4-2131-1120	- 9,200		
11)	Protective Services	Radio Licenses	1-4-2413-3605	- 5,000		
12)	Protective Services	Miscellaneous - Addition of 4% rate increase	1-3-2100-0600	- 200		
	Protective Services	Inspection Fees - Addition of 4% rate increase	1-3-2100-0610	- 280		
	Protective Services	Rescue extrication services revenues - Addition of 4% rate increase	1-3-2100-0620	- 200		
	Protective Services	False alarm fees - Addition of 4% rate increase	1-3-2100-0626	- 180		
	Protective Services	Parking Fines - Addition of 4% rate increase	1-3-2410-0548	- 1,100		
	Protective Services	Open Air Burning Permits - Addition of 4% rate increase	1-3-2410-0625	- 360		
	Protective Services	Dog Licences - Addition of 4% rate increase	1-3-2410-0630	- 2,200		
	Protective Services	Pound Fees - Addition of 4% rate increase	1-3-2410-0635	- 80		
	Corp Rev & Exp	4% rate increase allocated to Protective services department	1-3-0180-0574	4,600		
					-128,300	
Revised Pressures Jan 16					$ 1,807,435	9.27%
January 17, 2019						
					1,807,435	9.27%
1)	Corp Rev & Exp	Pay-As-You-Go (Roads) -Radio project	1-4-3127-7150	- 100,000		
2)	Infrastructure	Hot mix contracts	1-4-3414-4200	- 12,500		
3)	Infrastructure	Shoulder maintenance	1-4-3433-3425	- 15,000		
4)	Infrastructure	Signs replacement	1-4-3613-3425	- 9,000		
5)	Infrastructure	Dust Layer	1-4-3534-4200	- 5,000		
6)	Infrastructure	Snow contribution reserve	1-4-3737-7100	- 50,000		
7)	Infrastructure	Publication	1-4-8113-3590	- 400		
8)	Infrastructure	Environmental Committee	1-4-8114-3675	- 2,000		
9)	Infrastructure	New junior project coordinator	1-4-3111-1100	- 33,000		
10)	Waste	Additional revenues from min. fee on commercial bins	1-3-9510-0693	- 35,880		
11)	Waste	Additional contribution to waste reserve	1-4-9527-7100	35,880		
12)	Infrastructure	Sales of documents - Addition of 4% rate increase	1-3-8100-0571	- 15		
	Infrastructure	Minor variance application - Addition of 4% rate increase	1-3-8100-0820	- 140		
	Infrastructure	Letter of undertaking - Addition of 4% rate increase	1-3-8100-0823	- 45		
	Infrastructure	Road opening and closing - Addition of 4% rate increase	1-3-8100-0824	- 12		
	Infrastructure	Response to written replies - Addition of 4% rate increase	1-3-8100-0825	- 85		
	Infrastructure	Zoning amendment fees - Addition of 4% rate increase	1-3-8100-0830	- 1,828		
	Infrastructure	Part Lot Control Fees & One foot Reserve - Addition of 4% rate inc	1-3-8100-0835	- 160		
	Infrastructure	Site Plan Application Fees - Addition of 4% rate increase	1-3-8100-0840	- 1,000		
	Infrastructure	Subdivision Application Fees - Addition of 4% rate increase	1-3-8100-0845	- 280		
	Infrastructure	Subdivision Agreement Fees - Addition of 4% rate increase	1-3-8100-0846	- 250		
	Infrastructure	Land Severance - Addition of 4% rate increase	1-3-8100-0850	- 675		
	Infrastructure	Official Plan Amendment Fees - Addition of 4% rate increase	1-3-8100-0852	- 320		
	Infrastructure	Condomminiums Fees - Addition of 4% rate increase	1-3-8100-0854	- 80		
	Infrastructure	Legal Fees - Subdivision - Addition of 4% rate increase	1-3-8100-0855	- 320		

Schedule A

City of / Cité de Clarence-Rockland

Budget 2019

Operating budget Changes during Council Deliberations

	Department				Adjustments	Tax $'s	Tax Impact
	Infrastructure	Administration Fees - Subdivision - Addition of 4% rate increase	1-3-8100-0860	-	256		
	Infrastructure	Release of financial securities - Addition of 4% rate increase	1-3-8100-0864	-	138		
	Infrastructure	Sign Permit Fees - Addition of 4% rate increase	1-3-8100-0866	-	251		
	Infrastructure	City Engineering Fee - Site Plan - Addition of 4% rate increase	1-3-8400-0841	-	2,000		
	Infrastructure	Subdivision Engineering Fees - Addition of 4% rate increase	1-3-8400-0847	-	2,500		
	Corp rev & exp	4% rate increase allocated to Infrastructure department	1-3-0180-0574		10,355		
						-226,900	
Revised Pressures Jan 17						$ 1,580,535	8.11%
January 22, 2019							
						1,580,535	8.11%
1)	Corp Rev & Exp	Interest on AR	1-3-0150-0551	-	5,000		
2)	Corp Rev & Exp	Tax account name change	1-3-0150-0556	-	6,000		
3)	Council	Filming	1-4-1123-3229	-	30,000		
4)	Council	Advertising	1-4-1123-3005	-	3,000		
5)	Council	Committee	1-4-1123-3139	-	3,000		
6)	CAO	Integrity Commissioner	1-4-1224-4200	-	5,000		
7)	CAO	HR - Meals	1-4-1363-3440	-	500		
8)	CAO	Meals	1-4-1223-3440	-	2,500		
9)	Finance	Tax certificates	1-3-1230-0605	-	5,000		
10)	Finance	Audit-CIH	1-4-1233-3025	-	7,500		
11)	Finance	Softwares - MESH	1-4-1323-3651	-	8,000		
12)	Finance	Softwares - Booking	1-4-1323-3651	-	3,000		
13)	Corp Rev & Exp	Reduction in debt budget, elimination of Live Fire Burn Container capital project - Capital	1-4-1106-2100	-	3,155		
	Corp Rev & Exp	Reduction in debt budget, elimination of Live Fire Burn Container capital project - Interest	1-4-1106-2200	-	1,335		
14)	Transit	Bus shelter publicity	1-3-3910-0617		330,300		
	Transit	Provincial subsidy	1-3-3910-0731		76,570		
	Transit	Advertising	1-4-3913-3005	-	1,000		
	Transit	Material	1-4-3913-3425	-	1,000		
	Transit	Printing	1-4-3913-3555		800		
	Transit	Supplies	1-4-3913-3675	-	17,600		
	Transit	Snow contract	1-4-3914-4275	-	5,520		
	Transit	Bus contract	1-4-3914-4200	-	643,550		
15)	Finance	Elimination of Director of Finance & Economic Development position - Regular salaries	1-4-1231-1100	-	96,757		
	Finance	Elimination of Director of Finance & Economic Development position - EHT	1-4-1231-1210	-	1,887		
	Finance	Elimination of Director of Finance & Economic Development position - CPP	1-4-1231-1220	-	1,100		
	Finance	Elimination of Director of Finance & Economic Development position - EI	1-4-1231-1230	-	331		
	Finance	Elimination of Director of Finance & Economic Development position - WSIB	1-4-1231-1240	-	1,788		
	Finance	Elimination of Director of Finance & Economic Development position - OMERS	1-4-1231-1250	-	13,003		
	Finance	Elimination of Director of Finance & Economic Development position - Group Insurance	1-4-1231-1260	-	4,734		
16)	Infrastructure	Reduction in snow bank removal level of service	1-4-3734-4200	-	50,000		
	Infrastructure	Reduction in snow clearing level of service - Elimination of new 2019 proposed full time position	1-4-3121-1100	-	28,000		
	Infrastructure	Reduction in snow clearing level of service - Reduction in overtime	1-4-3121-1130	-	52,000		
	Infrastructure	Reduction in snow clearing level of service - Distribution salaries	1-4-3121-1165		80,000		
	Infrastructure	Reduction in snow clearing level of service - Distribution salaries w	1-4-3711-8100	-	80,000		

Schedule A

City of / Cité de Clarence-Rockland

Budget 2019

Operating budget Changes during Council Deliberations

	Department			Adjustments	Tax $'s	Tax Impact
	Infrastructure	Reduction in snow clearing level of service - Snow plowing & salting materials	1-4-3713-3425	- 20,000		
	Infrastructure	Reduction in snow clearing level of service - Snow plowing & salting contract	1-4-3714-4200	- 100,000		
	Community Services	Reduction in snow clearing level of service - Elimination of new 2019 proposed full time position	1-4-7311-1100	- 28,000		
	CAO	Reduction in snow clearing level of service - Elimination of new 2019 proposed full time position	1-4-1341-1120	28,000		
17)	Protective Services	Reduction of 1 By-Law Officer (5 to 4) - Regular salaries	1-4-2411-1100	- 47,234		
	Protective Services	Reduction of 1 By-Law Officer (5 to 4) - Accrued Sickleave	1-4-2411-1110	- 472		
	Protective Services	Reduction of 1 By-Law Officer (5 to 4) - EHT	1-4-2411-1210	- 921		
	Protective Services	Reduction of 1 By-Law Officer (5 to 4) - CPP	1-4-2411-1220	- 2,230		
	Protective Services	Reduction of 1 By-Law Officer (5 to 4) - EI	1-4-2411-1230	- 905		
	Protective Services	Reduction of 1 By-Law Officer (5 to 4) - WSIB	1-4-2411-1240	- 1,488		
	Protective Services	Reduction of 1 By-Law Officer (5 to 4) - OMERS	1-4-2411-1250	- 4,251		
	Protective Services	Reduction of 1 By-Law Officer (5 to 4) - Group insurance	1-4-2411-1260	- 6,617		
18)	Protective Services	Reduction of door-to-door "get out alive" program - PT Salaries	1-4-2161-1120	- 34,340		
	Protective Services	Reduction of door-to-door "get out alive" program - EHT	1-4-2161-1210	- 660		
19)	Protective Services	Reduction of 1 volunteer firefighter Fire-fighting	1-4-2121-1120	- 5,000		
	Protective Services	Reduction of 1 volunteer firefighter Training	1-4-2131-1120	- 2,000		
	Protective Services	Reduction of 1 volunteer firefighter Fire Halls	1-4-2141-1120	- 1,000		
20)	Corp Rev & Exp	Reduction in road reserve contribution	1-4-3127-7150	- 25,000		
21)	Corp Rev & Exp	Reduction in building reserve contribution	1-4-1317-7400	- 50,000		
22)	Corp Rev & Exp	Transfer from building reserve	1-3-1220-0581	- 50,000		
	Corp Rev & Exp	Contingence	1-4-1223-3998	50,000		
23)	Community Services	Mariage Licenses - Addition of 4% rate increase	1-3-0145-0541	- 500		
	Community Services	Death certificates - Addition of 4% rate increase	1-3-0145-0542	- 120		
	Community Services	Lottery licenses - Addition of 4% rate increase	1-3-0145-0543	- 320		
	Corp Rev & Exp	NSF & Return fees - Addition of 4% rate increase	1-3-0150-0552	- 500		
	Corp Rev & Exp	Mortgage Account opening fees - Addition of 4% rate increase	1--0150-0555	- 400		
	Corp Rev & Exp	Tax account name change - Addition of 4% rate increase	1-3-0150-0556	- 600		
	Corp Rev & Exp	Transfer between accounts - Addition of 4% rate increase	1-3-0150-0557	- 5		
	Corp Rev & Exp	Tax late notice fees - Addition of 4% rate increase	1-3-0150-0558	- 20,000		
	Finance	Business licenses - Addition of 4% rate increase	1-3-1230-0544	- 2,600		
	Finance	Tax certificates - Addition of 4% rate increase	1-3-1230-0605	- 1,000		
	Finance	Tax Inquiries - Addition of 4% rate increase	1-3-1230-0606	- 100		
	Corp Rev & Exp	4% rate increase allocated to Finance & CAO department	1-3-0180-0574	26,145		
24)	CAO	Pay equity impact department allocation	1-4-1221-1100	10,525		
	Daycares	Pay equity impact department allocation	1-4-6111-1100	1,956		
	Daycares	Pay equity impact department allocation	1-4-6131-1100	8,069		
	Daycares	Pay equity impact department allocation	1-4-6201-1100	8,069		
	Infrastructure	Pay equity impact department allocation	1-4-8111-1100	3,866		
	Construction	Pay equity impact department allocation	1-4-2431-1100	1,956		
	Finance	Pay equity impact department allocation	1-4-1231-1100	1,213		
	Construction	Pay equity funding - Construction	1-3-2430-0582	- 1,956		
	Corp Rev & Exp	Pay equity funding - Contingency	1-4-1223-3998	- 33,698		
					- 895,709	
Revised Pressures Jan 22					$ 684,826	**3.51%**

Schedule B
City of / Cité de Clarence-Rockland
Draft Budget 2019

2019 Capital Budget Changes during Council Deliberations

					Financing									
Item #	Capital Project	Draft	Revised	Change	Debt	Equipment reserve	General reserve	Building reserve	Vehicle Reserve	Library Reserve	Grant	Road Reserve	FGT	Comment
3	Rockland City Hall - Parking lot	450,000	400,000	- 50,000	- 50,000									Reduced, Jan 15
4	Rockland City Hall - Plan and estimate layout of departments	40,000	-	- 40,000			- 40,000							Deferred to 2020, Jan 15
5	Clarence-Rockland Arena - Hood fan	13,000	-	- 13,000		- 13,000								Eliminated, Jan 15
11	Community Services garage - Design and tender	75,000	25,000	- 50,000				- 50,000						Reduced, Jan 15
12	Jean-Marc Lalonde Arena - Renovations	3,300,000	100,000	- 3,200,000	- 3,200,000									Change of scope, Jan 16
13	Parks - tables & benches	25,000	12,500	- 12,500		- 12,500								Reduced, Jan 16
28	Thermal imaging camera	10,000	-	- 10,000		- 10,000								Deferred to 2020, Jan 16
30	Battery operated jaws of life	40,000	-	- 40,000		- 40,000								Deferred to 2020, Jan 16
65	2013 Enforcement Car AWD with upfit	60,000	-	- 60,000					- 60,000					Deferred to 2020, Jan 16
47	Scratch Coat (Charron, Marion, Blue Jay, Cardinal)	175,000	-	- 175,000								- 175,000		Change of scope
New	Scratch Coat (Old 17, Bouvier)	-	175,000	175,000								175,000		Change of scope
53	Closure of C-R arena entrance	70,000	-	- 70,000			- 70,000							Deferred to 2020, Jan 17
54	Baseline Road - Ditch work on private property	75,000	-	- 75,000	- 75,000									Eliminated, Jan 17
55	Clark Road, Drainage improvments	250,000	-	- 250,000									- 250,000	Deferred to 2020, Jan 17
56	Culvert replacement - Boundary/Cannan	150,000	150,000	-	- 150,000								150,000	Change in financing
12	Jean-Marc Lalonde Arena -	100,000		- 100,000										Change in scope
19	Morris Village Park redevelopment			-	- 110,000		110,000							Change in financing
69	Backhoe Replacement - Public Works	160,000	160,000	-	- 160,000				60,000			100,000		Change in financing
49	Culvert replacement program (VinetteW, VinetteE)	769,000	769,000	-								- 250,000	250,000	Change in financing
56	Culvert replacement - Boundary/Cannan	150,000	150,000	-								150,000	- 150,000	Change in financing
3	Parking Lot - Transit	400,000		- 400,000	- 200,000						- 200,000			Eliminated, Jan 22
2014	Live Fire Burn Container - Training	75,000	-	- 75,000		- 75,000								2014 project, eliminated Jan 22

Schedule B
City of / Cité de Clarence-Rockland
Draft Budget 2019

2019 Capital Budget Changes during Council Deliberations

2017	3 Ton snow plow - public works	320,000	320,000	-	- 75,000	75,000								2017 project, change in financing
35	Library : Furniture replacement	15,000	2,400	- 12,600						- 12,600				Eliminated by Library CAO
34	Library : Computer replacement	31,000	3,450	- 27,550						- 27,550				Eliminated by Library CAO
	Net Change	6,753,000	2,267,350	- 4,485,650	- 4,020,000	- 75,500	-	- 50,000	-	- 40,150	- 200,000	-	-	

CORPORATION OF THE CITY OF CLARENCE-ROCKLAND

BY-LAW 2019-16

BEING A BY-LAW TO ACTUALIZE CERTAIN USER FEES AND CHARGES FOR THE CITY OF CLARENCE-ROCKLAND.

WHEREAS Sections 391 of the Municipal act, 2001, as amended provides that without limiting sections 9, 10 and 11, a municipality may impose fees or charges on persons, for services or activities provided or done on behalf of it, for costs payable by it for services or activities provided or done by or on behalf of any other municipality or any local board, for the use of its property including property under its control; and

WHEREAS Part VIII, section 35 of the "*Fire Protection and Prevention Act 1997* S.O. 1997 , as amended, provides that the Fire Chief or an assistant of the Fire Marshall may impose the fees and charges fees for services or activities stemming from a fire department; and

WHEREAS Section 7 of The Building Code Act 1992, as amended; empowers Council to enact certain by-laws respecting construction, demolition and change of use permits and inspections;

WHEREAS the Commissioners for Taking Affidavits Act, R.S.O. 1990, empowers the Clerk, Deputy-Clerk and Treasurer of the City of Clarence-Rockland, by virtue of their office, as commissioners for taking affidavits in the County of Prescott and Russell; and

WHEREAS Section 69 of the Planning Act, R.S.O. 1990, Chapter P. 13 empowers the Council of a municipality to pass a by-law prescribing a tariff of fees for the processing of applications made in respect to planning matters;

WHEREAS the Council of the Corporation of the City of Clarence-Rockland deems it expedient to actualize user fees to recover the costs of services or activities provided by the City of Clarence-Rockland;

NOW THEREFORE the Council of the City of Clarence-Rockland enacts as follows:

1. **THAT** the user fees be established as per Schedules 'A' to 'L' attached hereto and forming part of this by-law, being:
   a. Schedule 'A' – Corporate

b. Schedule 'B' – Finance
c. Schedule 'C' – Business Licence
d. Schedule 'D' – Animal Control
e. Schedule 'E' – Landfill
f. Schedule 'F' – Fire Department
g. Schedule 'G' – Construction
h. Schedule 'H' – Signs
i. Schedule 'I' – Infrastructure and Planning
j. Schedule 'J' – Recreation
k. Schedule 'K' – Daycare
l. Schedule 'L' – Public Transportation

2. **THAT** any user fees actualized by this by-law shall take precedence over any other user fees previously adopted by any previous by-law, resolution and/or policy

3. **THAT** the by-laws 1998-37, 2015-176 and Policy ADM98-01 are hereby repealed

4. **THAT** this by-law shall come in force and effect as of the date of adoption

READ AND ADOPTED IN OPEN COUNCIL THIS 4TH DAY OF FEBRUARY, 2019.

_____ _____

GUY DESJARDINS, MAYOR **MONIQUE OUELLET, CLERK**

Schedule "A" to User Fee By-law 2019-16

CORPORATE

ITEM	REVISED: February 4, 2019 FEE
COMMISSIONER OF OATH SERVICES	
Commissioning of municipal documents	no fee
Commissioning of residency verification for pension purposes	$10.00
Commissioning other documents	$20.00
DEATH REGISTRATIONS	
Funeral Homes within Clarence-Rockland	$30.00
Funeral Homes outside Clarence-Rockland	$40.00
LOTTERY LICENSING	
Raffle Lottery Licence	3% of total retail prizes value - minimum fee of $30.00
Bingo Licence Application	3% of maximum prize board - maximum fee of $1200.00 / year
Lottery Licence Amendment Application	$20.00
Denial of Licence - Administration fee	$20.00
MARRIAGE LICENCES	
Marriage Licence Application	$160.00
MFIPPA REQUESTS	
Information Request Application	$5.00
Research time	$7.50 per 15 minutes
Photocopies / computer print outs	$0.20 per regular copy / $6.00 per oversized copy

Schedule "B" to User Fee By-law 2019-16

FINANCE

ITEM	REVISED: February 4, 2019 FEE
NSF & Returned Item	$42.00
Mortgage Account Opening - Change Fees	$32.00
Tax Account Name Change	$32.00
Transfer Between Accounts	$32.00
Tax & Water Certificates	$63.00
Inquiry print-outs (Tax-Water-AR)	$6.00
Duplicate receipt or bill	$6.00
Tax reminder notice (outstanding accounts)	$5.00
Property tax search fee & archives searches	$35.00

Schedule "C" to User Fee By-law 2019-16

BUSINESS LICENCES

RE: Business Licencing By-law 2015-179	REVISED: February 4, 2019 FEE
Business Licence Category	
Seasonal (in operation less than 6 consecutive months)	$62.40
Seasonal Produce Vendor (in operation less than 6 consecutive months)	$62.40
Home occupation	$62.40
Food/Beverage Service	$104.00
Automotive Service	$104.00
General	$104.00
Trades & Contractors	$104.00
Recreations	$104.00
Mobile Sales/Service	$104.00
Amusement	$312.00
Entertainment	$520.00
Transient Trader	$156.00
Transient Trader (Special Event)	$156.00/year OR $62.40/day
Itinerant Vendor	$312.00
Auctioneer	$208.00/year OR $83.20/day
ADMINISTRATION FEES	
Application Fee	$52.00
Change of name	$26.00
Change of address	$26.00
Change of ownership	$26.00
Late fee	$26.00

Schedule "C" to User Fee By-law 2019-16
BUSINESS LICENCES

Schedule "D" to User Fee By-law 2019-16

ANIMAL CONTROL

RE: Dog By-law No. 2015-180	REVISED: February 4, 2019 FEE
Dog Licencing Fees	
Dog (female or male)	$26.00
Any dog deemed to assist a person with a handicap (proof required) - limited to one per household	no fee
Late registration fee (payable in addition to registration fee)	$21.00
Dog tag replacement	$6.00
Kennel licence	$52.00
Animal Impounding Fees	
First occurance	$76.00
Second and subsequent occurance	$120.00
Other fees	
Adoption fee (per animal)	$26.00

Schedule "E" to User Fee By-law 2019-16

LANDFILL

RE: Landfill 2018-48	REVISED: February 4, 2019 FEE
Material Type	
Yard waste	no fee
Branches up to 12" in diameter	no fee
Household Hazardous Waste	no fee
Blue and black box recyclables	no fee
Scrap metal (without refrigerants)	no fee
Tires	no fee
Textiles	no fee
Electronics	no fee
Bale wrapping	no fee
Weigh only ticket	$20.00
Items containing refrigerants	$20.00
Cover alternative and concrete	$45.00/tonne - minimum fee of $20.00
Construction wood	$45.00/tonne - minimum fee of $20.00
Residential, commercial construction and demolition waste (not defined as mixed loads)	$90.00/tonne - minimum fee of $20.00
Mixed loads	$135.00/tonne - minimum fee of $20.00
Contaminated soils	$135.00/tonne - minimum fee of $20.00
Asbestos	$300.00/tonne - minimum fee of $20.000 plus surcharge
Surchages	
Extended opening hours	$110.00/ hour - minimum of $330.00/ day
Hazardous waste in load	$10.00/ item - minimum $30.00/ load - maximum $300.00/ load
Electronic waste surcharge	$30.00/ item - minimum $30.00/ load - maximum $300.00/ load
Refrigerant surcharge	$30.00/ item - minimum $30.00/ load - maximum $300.00/ load
Tires surcharge	$30.00/ item - minimum $30.00/ load - maximum $300.00/ load
Administrative billing surcharge	$50.00/ visit

*Does not include payment for removal and associated administrative surcharge of 25%, if required

In the event the scale is not operable, fees shall be calculated using a ratio of 0.2 tonnes per cubic meter for uncompressed loads and 0.4 tonnes per cubic meters for compressed loads.

Schedule "E" to User Fee By-law 2019-16
LANDFILL

Schedule "F" to User Fee By-law 2019-16

FIRE DEPARTMENT

ITEM	REVISED: February 4, 2019 FEE
File Search	
Letters of conformity to lawyers and real estate agents	$75.00
Letters of conformity for real estate sales	$75.00
Letters of conformity for the LCBO applications	$75.00
Fire incident summary reports for insurance brokers	$75.00
All other letters of conformity	$75.00
Plan review	
Subdivision plan review	$75.00
Revision and approval of distribution site for propane gas as required by TSSA (Level 1)	$350.00 + inspection fee
Revision and approval of distribution site for propane gas as required by TSSA (Level 2)	$1,000.00 + inspection fee
On Site Inspections (for initial and final inspection only)	
Residential	$100.00
Apartment	$100.00 + $25.00/ unit
Hotel/Motel (1-10 units)	$250.00
Hotel/Motel (more than 10 units)	$25.00/ unit
Commercial and Industrial (first 10,000 square feet)	$250.00
(every additional 5,000 square feet)	$25.00/ square foot
Daycare	$100.00
All other additional non-compliant inspections	$50.00
Accreditation Inspections	
Group Homes and Retirement Homes	$150.00 + $50.00/hour
All other accredited inspections	$150.00 + $50.00/hour
Other Inspections	
Inspections for liquor licence applications	$150.00
Inspections of refreshment vehicles or food trucks (commonly known as chip wagons)	$100.00
Inspection initiated under the fire department's fire prevention and public education program	no fee
Education courses	
Courses requested of the department (prevention, fire extinguishers, evacuations, fire simulations)	$50.00/up to 10 participants ($5.00/additional participant)
Fire calls	
For incidents on private property: vehicle fires, boat fires, recreational vehicle fires, spills, extrications, technical rescues (e.g. confined space, trench, high-angle, etc.), water or ice rescues	Current rates as set by the Ministry of Transportation per vehicle per hour + any additional costs for each and every call (incl. costs for other agencies to assist)
Fire guard (required or upon request) includes 1 fire apparatus and 2 firefighters	$200.00/ hour
Roadway / Highway Incidents	
For incidents on public or private roads or highways: Vehicle fires, boat fires, recreational vehicle fires, attendance to motor vehicle accidents, spills, extrications, rescues, police and ambulance assistance and all other fire department request be it urgent or non-urgent	As per fees set out by the Ministry of Transportation

Schedule "F" to User Fee By-law 2019-16

FIRE DEPARTMENT

Water / Ice Incidents on Public Waterways	
For incidents on public waterways: Vehicle fires, boat fires, recreational vehicle fires, ice fishing hut fires, attendance to accidents (including watercraft accidents, vehicles through the ice, etc.), spills, extrications, rescues (incl. water/ice rescues), police and ambulance assistance and all other requests for fire department attendance (urgent or non-urgent)	As per fees set out by the Ministry of Transportation
Medical Standby for Events	
Medical Standby (required or upon request) includes 1 squad with medical bag and 2 firefighters (trained to the First Responder level or higher)	$200.00/hr
Permits	
Fireworks Permit (RE: By-law 2007-45)	$100.00
Special occasions Open Air Burning Permit (RE: By-law 2017-92)	$25.00/ event
Open Air Burning Permit (RE: By-law 2017-92)	$25.00/ year
Fire, Smoke or Carbon Monoxide Alarm - Faulty, Accidental, Malicious, or Cooking Incidents	
First occurance (in the previous 12 months)	no fee *
Second occurance (in the previous 12 months)	$500.00 *
All subsequent occurances (in the previous 12 months)	$1500.00 *
* In addition to the prescribed fee, a notice requesting proof of a recent certificate of an annual inspection of the alarm system, as prescribed by the Ontario Fire Code within 30 days of the requisition.	
Cost recovery	
Rental or purchase fees for equipment necessary to assist in extinguising a fire, demolition, security or clean up at an emergency scene or location.	100% cost recovery
Provision of or replacement of equipment in a residence, commercial business or other building in order to conform to the *Ontario Fire Code* (i.e. replacement of smoke alarms or batteries, etc)	100% cost recovery
Fire Department Response Fees - Indemnification technology	Current rates as set by the Ministry of Transportation per vehicle per hour + personnel costs + any additional costs for each and every call
Other fees	
Generator / pump serivces (i.e. flooding caused by power outages, to power up the furnace, etc.)	$100.00/ hour

Schedule "A" to User Fee By-law 2019-16
Construction

Classes of Permits and Permit Fees

Class of Permit	Base Line Fee	Additional Fees
Group "C" Low Density Residential (single family dwellings)	$ 1479.00 up to 1,500 sq/ft in *gross building area*	$0.80 per sq/ft for buildings with a floor area over 1,500 sq/ft
Group "C" Multiple Residential	$ 1,530.00 up to 1,500 sq/ft in *gross building area*	$1.15 per sq/ft for buildings with a floor area over 1,500 sq/ft
Group "C" Residential Additions and *Major Alterations*	$ 638.00 up to 750 sq/ft in *gross building area*	$0.75 per sq/ft for buildings with a floor area over 750 sq/ft
Group "C" Residential garage, carport, acc. building, deck, minor alteration	$ 153.00 up to 300 sq/ft in *gross building area*	$0.40 per sq/ft for buildings or structures with a floor area over 300 sq/ft
Group "A", "B", "D", "E" and "F" New Construction	$ 4,590.00 up to **5,000** sq/ft in *gross building area*	$1.40 per sq/ft for buildings with a floor area over **5,000** sq/ft
Group "A", "B", "D", "E" and "F" Additions and *Major Alterations*	$ 2,040.00 up to **2,500** sq/ft in *gross building area*	$1.40 per sq/ft for buildings with a floor area over **2,500** sq/ft
Group "A", "B", "D", "E" and "F" accessory building, minor alterations	$ 459.00 up to **1,500** sq/ft in *gross building area*	$0.40 per sq/ft for buildings with a floor area over **1,500** sq/ft
Farm Buildings (for animals) Farm Buildings (storage, without animals) Fabric covered steel truss Buildings (COVER ALL)	$ 1020.00 up to 5,000 sq/ft in *gross building area* $ 816.00 up to 5,000 sq/ft in *gross building area* $ 306.00 Fixed fee	$0.20 per sq/ft for buildings with a floor area over 5,000 sq/ft $0.15 per sq/ft for buildings with a floor area over 5,000 sq/ft
Lagoons	Fixed fee of $ 357.00	
Silos	Fixed fee of $ 204.00	
Designated Structures Residential (OBC)	Fixed fee of $ 204.00	
Designated Structures Other(OBC)	Fixed fee of $ 408.00	
Solid fuel burning appliance	Fixed fee of $ 204.00	
Change of Use / Conditional permits	Fixed fee of $ 255.00	
Other Permits: Permit renewal (10.1) Transfer of permit (11.2) Revision to permit *Temporary structures*	Fixed fee of $ 153.00	
Demolition (Residential)	Fixed fee of $ 204.00	
Demolition (Other)	Fixed fee of $ 408.00	
Plumbing	$15.30 per fixture	
Connection fees (water, sewer, storm	$51.00 per connection	
Foundation (partial permit)	Additional fee of $255.00	
Building without a permit fee	Additional fee of double the permit fee(as set out in this schedule "A") to max of 10,000$	
Use of Large copier machine	A1 format $5.10 each copy A2 format $2.55 each copy	

*Fees may be added to tax roll if not paid as per section 7.(8.1) of the Building Code Act.

Note Group "A" buildings: Assembly occupancies
Group "B" buildings: Detention, care and treatment occupancies
Group "C" buildings: Residential occupancies
Group "D" buildings: Business and personnel services occupancies
Group "E" buildings: Mercantile occupancies
Group "F" buildings: Industrial occupancies;
As defined under Division A, article 1.4.1.2 of the Ontario Building Code

Schedule "H" to User Fee By-law 2019-16

SIGNS

RE: Signs By-law 2015-160	REVISED: February 4, 2019 FEE
Types of permits	
Permanent sign	$125.00 + $21.00/additional sign, same application
Temporary sign	$125.00
Temporary sign - any subsequent application within the same year	$62.00
Sign permit when sign is already installed	$156.00 + $31.00/additional sign, same application
Other fees related to signs	
Variance to the sign by-law	$208.00
Variance to the sign by-law when sign is already installed	$416.00
Encroachment permit for a sign	$208.00
Encroachment permit renewal	$104.00

Schedule "I" to User Fee By-law 2019-16

INFRASTRUCTURE PLANNING

ITEM	REVISED: February 4, 2019 FEE
Official Plan / Zoning Amendments Applications	
Official Plan Amendment	$4,160.00
Zoning By-law Amendment	$2,704.00
Zoning By-law Amendment - condition of severance	$1,040.00
Temporary Use	$1,716.00
Removal of Holding Provision	$728.00
Subdivision Agreements	
Draft Plan of Subdivision	$146.00/ dwelling unit or block - Minimum of $2,600.00
Resubmission of a Draft Plan of Subdivision following the lapse of approval	$73.00/ dwelling unit or block - Minimum of $1,040.00
Revision of a Draft Plan of Subdivision	$83.00/ dwelling unit or block - Minimum of $2,600.00
Subdivision Agreement Preparation	$2,288.00
Amendment to the Subdivision Agreement	$1,040.00
Administration Fee	$3,328.00
Subdivision Engineering Fee	$4,160.00 for two (2) reviews - $335.00/additional review
Request to extend Draft Plan Approval	$905.00
Engineering Review - Fees payable at Subdivision Plan Agreement Stage **	2.5% of the estimated cost of the site works
**Any and all consultant fees collected for the review of plans and studies will be the responsibility of the applicant and deducted from the total engineering fees calculated for the project.	
Site Plans Applications	
Residential	$146.00/ dwelling unit - Minimum of $1,040.00
Commercial, Industrial, Institutional, other non-residential (Less than 5000 square feet)	$1,040.00
Commercial, Industrial, Institutional, other non-residential (5000 square feet and up)	$1,560.00
Mixed use	$1,040.00 + $146/residential unit
Letter of Undertaking - Site Plans	$572.00
Minor amendment to an existing registered Site Plan Agreement	$572.00
Creation of/or addition to private parking area	$572.00
City Engineering Fee	$572.00 + deposit of $1,000.00 which will be deducted from the Engineering fees at the time of the signature of the agreement
Engineering Review (payable at Site Plan Agreement Stage) **	4% of the estimated cost of the site works if total cost esitmate is under $100,000.00
	3% of the estimated cost of the site works if total cost estimate is between 1000,000.00 to $500,000.00
	2% of the estimated cost of the site works if total cost estimate is over $500,000.00
**Any and all consultant fees collected for the review of plans and studies will be the responsibility of the applicant and deducted from the total engineering fees calculated for the project.	
Condominium Plans	
Plan of Condominium Application	$140.00/ dwelling unit - minimum of $1,040.00
Exemption of a Plan of Condominium	$1,040.00
Condominiun conversion	$572.00

Schedule "I" to User Fee By-law 2019-16

INFRASTRUCTURE PLANNING

Committee of Adjustment	
Severance / Consent Application - Creation of a new lot	$1,248.00
Consent - Other applications (lot enlargement, lot surplus, etc.)	$884.00
Changes to conditions after provisional consent is given by the Committee or recirculation of a modified request	$364.00
Minor Variance Application	$728.00
Part-Lot Control	
Part-Lot Control Application	$572.00
Miscellaneous Planning Fees	
Lifting of 0.30 meter reserve	$364.00
Road opening or Road Closing	$1,144.00
Dedication of public highway & assumption of subdivision (applicant assumes the legal and surveying fees)	$156.00
Encroachment	$338.00
Cash-in-lieu of Parking (each space reduced by Council shall be valued at $1,689.82 and payable as per Council's decision)	$452.00
Release of Financial Securities (partial or full release)	$239.00
Letter of Undertaking	$234.00
All other requests	$220.00
Development Charge Deferal Fee	$225.00
Development Agreement Fee	$225.00
Written responses	
Zoning Report	$110.00
Compliance Report	$110.00
Subdivision Compliance	$90.00
Work Order	$90.00
Written opinions	$68.00/first hour - $110.00/subsequent hour
	$10.53/extra lot (if request is for more than one property
Research and Copies	
Paper copy of Official Plan - City of Clarence-Rockland	$36.00
Paper copy of Official Plan - Bourget	$36.00
Paper copy of Zonign By-law	$36.00
CD copy of Official Plan or Zoning By-law	$16.00
Paper copy of Zoning By-law Schedules	
Small format (b&w) - 11''x17''	$5.00
Small format (color)- 11''x17''	$7.00
Large format (b&w) - 2'x3'	$7.00
Large format (color) - 2'x3'	$9.00
Archival Retrieval Fee	$110.00
Refunds	
If the request is made before the technical circulation is initiated	100%
If the request is made after the technical circulation is initiated	30%
If the request is made after the required public meeting	nil

NOTE: When an applicant submits more than one application type per site, then the applicant is entitled to a 10% discount on each application.

Schedule "J" to User Fee By-law 2019-16

RECREATION AND FACILITIES

ITEM	REVISED: February 4, 2019 FEE
Baseball Fields	
Regular rental rate (maximum 3hrs)	$41.60
Tournament - regular daily rate (full day, including evening)	$166.40
Tournament - regular evening rate (evening only- after 6:00 pm)	$41.60
Clarence-Rockland Minor Sports Associations rental rate (max.3hrs)	$31.20
Tournament - Clarence-Rockland Minor Sports Associations (full day, including evening)	$78.00
Tournament - Clarence-Rockland Minor Sports Associations (evening only - after 6:00 pm)	$20.80
Soccer Fields	
Regular rental rate (maximum 3hrs)	$46.80
Seasonals (reduced rate upon written agreement)	$41.60
Tournament - regular daily rate (full day, including evening)	$166.40
Tournament - regular evening rate (evening only - after 6:00 pm)	$52.00
Clarence-Rockland Minor Sports Associations rental rate (max.3hrs)	$31.20
Tournament - Clarence-Rockland Minor Sports Associations (full day, including evening)	$78.00
Tournament - Clarence-Rockland Minor Sports Associations (evening only - after 6:00 pm)	$21.80
Rink Surface Rental - Ice	
Prime Time - regular rate	$244.40
Prime Time - Clarence-Rockland Minor Sports Associations	$214.24
Down Time - regular rate	$208.00
Down Time - Clarence-Rockland Minor Sports Associations	$187.47
Last Minute Ice Rental (no discounted rate for Minor Sports)	$160.68
Sport Education Program Rate	$150.00
Rink Surface Rental - No ice	
Prime Time - regular rate	$62.40
Prime Time - Clarence-Rockland Minor Sports Associations	$48.60
Down Time - regular rate	$52.00
Down Time - Clarence-Rockland Minor Sports Associations	$41.60
Special event with alcohol licence (daily rate)	$624.00
Special event - no alcohol (daily rate)	$520.00
Special event - set up fee	$36.40
Boat Ramps	
Regular use	no fee
Fishing Tournaments or other special activities	$10.40/boat

Schedule "J" to User Fee By-law 2019-16

RECREATION AND FACILITIES

Facility Rentals	
Jean-Marc Lalonde Arena & Clarence Creek Arena Community Halls - without alcohol (hourly rate)	$40.00
Jean-Marc Lalonde Arena & Clarence Creek Arena Community Halls - with alcohol (hourly rate)	$60.00
Jean-Marc Lalonde Arena & Clarence Creek Arena Community Halls - funerals (per event rate)	$120.00
Jean-Marc Lalonde Arena & Clarence Creek Arena Community Halls - Non-profit organizations (meeting/breakfast)	$30.00
Jean-Marc Lalonde Arena & Clarence Creek Arena Community Halls - Carnival activities (daily rate)	$120.00
Ronald Lalonde & Alphone Carrière Community Centres - without alcohol (hourly rate)	$30.00
Ronald Lalonde & Alphone Carrière Community Centres - with alcohol (hourly rate)	$35.00
Ronald Lalonde & Alphone Carrière Community Centres - funerals (per event rate)	$110.00
Ronald Lalonde & Alphone Carrière Community Centres - Non-profit organizations (meetings - maximum 3hrs)	$30.00
Ronald Lalonde & Alphone Carrière Community Centres - Non-profit organizations (breakfast/dinner)	$35.00
Chamberland Centre & St-Pascal Optimist Hall (daily rate)	$80.00
Chamberland Centre & St-Pascal Optimist Hall - Non-profit organizations (meetings - maximum 3hrs)	$30.00

Schedule "K" to User Fee By-law 2019-16

DAYCARE

ITEM	revised: February 4, 2019 FEE
Toddler (18-30 months old)	
Daily rate	$52.05
Required deposit	$520.50
Preschool (30 months old - School age)	
Daily rate	$50.10
Required deposit	$501.00
School age - School day (AM and PM)	
Daily rate	$22.20
Required deposit	$222.00
School age - School day (AM or PM)	
Daily rate	$16.65
Required deposit	$166.50
School age - Full day	
Daily rate	$31.25
Late payment Fees	
Monthly interest applied to all accounts in arrears	1.25%
Statement of account - late payment	$10.00
Telephone reminder call - late payment	$20.00
Letter advising client - no longer eligible for service due to outstanding payment	$30.00
Other fees	
Creation of new account	$30.00

Schedule "L" to User Fee By-law 2019-16

PUBLIC TRANSPORTATION

ITEM	REVISED: February 4, 2019 FEE
CR Transpo	
Monthly Pass - Adult	$248.00
Monthly Pass - Student	$180.00
Daily Pass	$16.00
Daily Pass Booklet	$210.00
Publicity - CR Transpo Bus /Shelter	
Shelter - annual rate	$1,300.00
Shelter - monthly rate	$200.00
Bus - Standard Interior Card - monthly rate	$75.00
Bus - Standard Interior Card - monthly rate (2 buses)	$100.00
Bus - Super Interior Card - monthly rate	$100.00
Bus - Super Interior Card - monthly rate (2 buses)	$125.00
Bus - Decal on back, side of bus or front side window - monthly rate (6 or 12 months contract)	$175.00
Bus - Decal on side windows - monthly rate (6 or 12 months contract)	$125.00
Bus - Decals (oversized) one window + one side of bus - monthly rate (6 or 12 months contract)	$225.00
Bus - Full wrap - monthly rate (12 months contract only)	$500.00

CORPORATION OF THE CITY OF CLARENCE-ROCKLAND

BY-LAW 2015-176

BEING A BY-LAW TO ACTUALIZE CERTAIN USER FEES AND CHARGES FOR THE CITY OF CLARENCE-ROCKLAND.

WHEREAS Sections 391 of the Municipal act, 2001, as amended provides that without limiting sections 9, 10 and 11, a municipality may impose fees or charges on persons, for services or activities provided or done on behalf of it, for costs payable by it for services or activities provided or done by or on behalf of any other municipality or any local board, for the use of its property including property under its control; and

WHEREAS Part VIII, section 35 of the "*Fire Protection and Prevention Act 1997* S.O. 1997 , as amended, provides that the Fire Chief or an assistant of the Fire Marshall may impose the fees and charges fees for services or activities stemming from a fire department; and

WHEREAS Section 7 of The Building Code Act 1992, as amended; empowers Council to enact certain by-laws respecting construction, demolition and change of use permits and inspections;

WHEREAS the Commissioners for Taking Affidavits Act, R.S.O. 1990, empowers the Clerk, Deputy-Clerk and Treasurer of the City of Clarence-Rockland, by virtue of their office, as commissioners for taking affidavits in the County of Prescott and Russell; and

WHEREAS Section 69 of the Planning Act, R.S.O. 1990, Chapter P. 13 empowers the Council of a municipality to pass a by-law prescribing a tariff of fees for the processing of applications made in respect to planning matters;

WHEREAS the Council of the Corporation of the City of Clarence-Rockland deems it expedient to actualize user fees to recover the costs of services or activities provided by the City of Clarence-Rockland;

NOW THEREFORE the Council of the City of Clarence-Rockland enacts as follows:

1. **THAT** the user fees be established as per Schedules 'A' to 'N' attached hereto and forming part of this by-law, being:
   a. Schedule 'A' – Ice Rental Fees
   b. Schedule 'B' – Fire Department Fees
   c. Schedule 'C' – Day Care Fees
   d. Schedule 'D' – Bus pass Fees
   e. Schedule 'E' – Slab Rental Fees

f. Schedule ‘F’ – Rates for fishing tournament and special activities at the boat launch
g. Schedule ‘G’ - Publicity on the CRtranspo buses and bus shelters
h. Schedule ‘H’ – Classes of permits and permit fees
i. Schedule ‘I’ - Fees for the processing of applications in respect to planning matters
j. Schedule ‘J’ - User fees – Corporate Services
k. Schedule ‘K’ – User fees – Finance Department
l. Schedule ‘L’ - Open air burning permit fees
m. Schedule ‘M’ - Business licence fees
n. Schedule ‘N’ – Dog licensing fees
o. Schedule ‘O’ – Sports fields rates
p. Schedule ‘P’ – Rental rates for the community Halls
q. Schedule ‘Q’ – Landfill Site Fees

2. **THAT** any user fees actualized by this by-law shall take precedence over any other user fees previously adopted by any previous by-law, resolution and/or policy

3. **THAT** the by-laws 2004-11, 2009-185, 2012-25, 2012-59, 2013-26, 2013-27, 2014-86 and 2015-109 are hereby repealed as of January 1st, 2016:

4. **THAT** this by-law shall come in force and effect as of January 1st, 2016.

READ AND ADOPTED IN OPEN COUNCIL THIS 21ST DAY OF DECEMBER, 2015.

_____ _____

GUY DESJARDINS, MAYOR **MONIQUE OUELLET, CLERK**

SCHEDULE "A" TO BY-LAW 2015-176, AS AMENDED BY BY-LAW 2018-33

TARIFS DE LOCATION – PATINOIRES INTÉRIEURES
RENTAL FEES – INTERIOR ICE RINK

	Associations de sport mineur local Local minor sport associations	***Autres*** Others
Heures de pointes Prime Time Hours	206$/h	235 $/h
Heures creuses Down Time Hours	180.25$/h	200 $/h
Location de dernière minute Last minute Ice rental	154.50 $/h	154.50 $/h

ANNEXE "B" / SCHEDULE "B"

to By-law no. 2015-176/ au règlement no. 2015-176
as amended by By-Law 2016-93/ tel que modifé par le règlement 2016-93

1. RECHERCHES DE DOSSIERS	**1. FILE SEARCH**	**FRAIS/ FEE**
◆ Lettres de conformité aux avocats et aux agents d'immeubles ◆ Lettres de conformité pour ventes d'immobiliers ◆ Sommaires de rapports d'incendies pour courtiers d'assurance ◆ Lettres de conformité pour la Régie des alcools de l'Ontario (excluant organisations accréditées) ◆ Toutes autres lettres de conformité ◆ Révision de plan de subdivision	◆ Letters of conformity to lawyers and real estate agents ◆ Letters of conformity for real estate sales ◆ Fire incident summary reports for insurance brokers ◆ Letters of conformity for the Liquor Commission Board of Ontario applications (excluding accredited organizations) ◆ All other letters of conformity ◆ Subdivision plan review	75.00 $
2. INSPECTIONS SUR SITE	**2. ON SITE INSPECTIONS**	
Pour inspection initial et finale seulement	***For initial and final inspection only***	
a) Résidentiel	a) Residential	100.00$ /inspection
b) Appartements	b) Apartment	100.00 $ + 25.00 $ / unité – unit
c) Hôtel 1 à 10 unités 10 unités et plus	c) Hotel/Motel 1 to 10 units More than 10 units	250.00$ 20.00 $ /unité -unit
d) Propriétés commerciales et industrielles ◆ Premier 10,000 pieds carrés ◆ Chaque 5,000 pieds carrés additionnel	d) Commercial and Industrial properties ◆ First 10,000 square feet ◆ Every additional 5,000 square feet	250.00 $ 25.00 $ /pied carré - per square foot
e) Garderies	e) Daycares	100.00 $
f) Toute autre inspection non conforme additionnelle	f) All other additional non-compliant inspections	50.00$

3. INSPECTIONS **D'ACCRÉDITATION**	***3. ACCREDITATION*** **INSPECTIONS**	
◆ Foyers de groupe, maisons de pension ◆ Autres inspections d'accrédité	◆ Group Homes and Retirement homes ◆ Other Accredited inspections	150.00 $+ 50.00 $ l'heure / hour 150.00 $ + 50.00 $ l'heure / per hour
4. INSPECTIONS POUR LICENCIEMENT D'ÉTABLISSEMENT DE BOISSONS ALCOOLISÉES	**4. INSPECTIONS FOR LIQUOR LICENSE APPLICATIONS**	150.00 $
5. COURS PRÉVENTION / EXTINCTEUR DE FEU / ÉVACUATIONS OU SIMULATION DE FEU 1 à 10 personnes 11 et plus	**5. COURSES PREVENTION/ FIRE EXTINGUISHERS/ EVACUATIONS/ FIRE SIMULATIONS** 0 to 10 people Over 11 people	coûts des matériaux / cost of material + 50.00 $ 5.00 $/ person
6. Feu de véhicule, bateaux, véhicules récréatifs, accidents, la fréquentation aux accidents de véhicules, les déversements, les sauvetages, désincarcérations, secours sur l'eau ou la glace, l'assistance aux polices ou ambulances et toutes autres demandes d'intervention du service des incendies que ce soit urgent ou non-urgent.	**6.** Vehicle fires, boat fires, recreational vehicle fires, attendance to motor vehicle accidents, spills, extrications, rescues, water or ice rescue, police and ambulance assistance and all other fire department requests be it urgent or non-urgent.	Taux établi par *Ministère du Transport* As per fees set out by *Ministry of Transport*
7. Gardien de feu (obligatoire ou sur demande)	**7.** Fire guard (Required or upon request)	1 camion/fire apparatus + 2 pompiers/firefighters + 200.00/heure/hour
8. Permis pour feu d'artifice (excluant organisations accréditées)	**8.** Fireworks permit (excluding accredited organizations)	100.00 $
9. Permis de feu pour occasion spécial	**9.** Special occasions fire permit	25.00$ + Coût du permis/ Cost of the permit
10. Inspections de véhicules utilisés pour la vente de nourriture ou de rafraîchissement	**10.** Inspections of refreshment vehicles or food trucks (commonly known as chip wagons)	100.00 $

11. *FAUSSE ALERTE* **D'ALARME À FEU (à l'intérieur d'une année calendrier):** ◆ 1er Appel ◆ 2e appel ◆ Tout appel subséquent	***11.*** *FALSE ALARMS (within* **one calendar year):** ◆ 1st false alarm ◆ 2nd False Alarm ◆ All other additional false alarms	aucun frais + 250.00 $ + 1,000.00 $ + Un avis demandant un certificat récent d'une inspection annuelle du système d'alarme, tel que prescrit par le Code des incendies de l'Ontario dans les trente jours suivant la réquisition. A notice requesting proof of a recent certificate of an annual inspection of the alarm system, as prescribed by the Ontario Fire Code within 30 days of the requisition.
12. Inspections initiées ou requises sous le programme de prévention du service d'incendie.	**12.** Inspections initiated under the fire departments' fire prevention and public education program.	Aucun frais No charge
13. Révision et approbation de plan de distribution de gaz propane tel que requis par TSSA	**13.** Revision and approval of distribution site for propane gas as required by TSSA.	Niveau/Level 1 350.00$ + Niveau/Level 2 1000.00$ + Frais d'inspection selon item 2 d/ Inspection fees outlined in item 2d
14. INFRACTIONS AU CODE DE FEU Établi par *Loi sur les infractions provinciales* L.R.O. 1990	**14. FIRE CODE VIOLATIONS** As per *Provincial Offices Act,* L.R.O. 1990	Taux établi par *Loi sur les infractions provinciales* L.R.O. 1990 As per fees set out by *Provincial Offices Act,* 1990

15. RÉTABLISSEMENT DES **COUTS ENCOURUS À 100%** ◆ Pour location ou achat d'équipement nécessaire pour combattre un feu, démolir, sécuriser ou nettoyer une scène ou emplacement. ◆ Fournir ou remplacer un équipement pour rendre la résidence, commerce ou autre conforme au Code des incendies de l'Ontario. (par ex.: détecteur de fumée, piles, etc.)	**15. 100% COST RECOVER** ◆Rental or purchase fees for equipment necessary to assist in extinguishing a fire, demolition, security or clean up at an emergency scene or location. ◆Provision of or replacement of equipment in a residence, commercial business or other building in order to conform to the Ontario Fire Code. (i.e.: replacement for smoke alarms or batteries, etc)	Rétablissement des coûts encourus à 100% 100% cost recovery
16. SERVICE NON DÛ AUX INCENDIES Service de génératrice/pompe (minimum) ◆ Inondation causée par un manque d'électricité ◆ Faire fonctionner la fournaise ◆ Etc.	**16. NON-FIRE RELATED** Generator/pump services (minimum) ◆ Flooding caused by power outages ◆ To power up the furnace ◆ Etc.	100.00$ / heure/hour
17. Lors de notre campagne de prévention Sortez Vivant des alarmes de fumée et de monoxyde de carbone, tous les coûts associés au remplacement de batteries, détecteur de fumée et/ou alarmes de monoxyde de carbone seront facturés au coût réel pour recouvrir le coût de l'achat de l'équipement.	**17.** Under the Get Out Alive smoke and Carbon monoxide alarm campaign, all costs associated with the replacement of batteries and smoke and/or Carbon monoxide alarms will be billable and recoverable at cost	Rétablissement des coûts encourus à 100% 100% cost recovery
18. HONORAIRES POUR L'INTERVENTION DU SERVICE D'INCENDIE - TECHNOLOGIE D'INDEMNISATION	**18. FIRE DEPARTMENT RESPONSE FEES-INDEMNIFICATION TECHNOLOGY®**	Taux actuel du *Ministère du Transport* par véhicule par heure, plus les coûts de personnel ainsi que les coûts supplémentaires pour chaque appel Current rates as set by *Ministry of Transport* per vehicle per hour plus

		personnel costs plus any additional costs for each and every call

19. *FEUX À CIEL OUVERT* **NON-AUTORISÉ** ◆ Plainte ◆ Brûler entre le coucher et le lever de soleil ◆ Brûler le compost et des déchets toxiques ◆ Interdiction de feu en vigueur ◆ Aucun permis de feu en plein air valide remis ◆ Le défaut de fournir un permis de feu en plein air valide	**19. NON-AUTHORIZED OPEN AIR BURNING** ◆ Burn complaint ◆ Burning between sunset and sunrise ◆ Burning compost and toxic waste materials ◆ Fire ban in place. ◆ No valid open air burn permit issued. ◆ Failure to provide a valid permit ◆ Any violation of the conditions identified on the open air burn permit. ◆ All other actions deemed in violation of the current Municipal Open air burning bylaw.	$250.00

Schedule 'C' to By-law no. 2015-176, as amended by 2018-33
Annexe 'C' au règlement no. 2015-176, tel que modifié par 2018-33

Groupe d'age/Age group	**Taux journaliers proposés + 11% (effectif le 1er juillet 2018)/Proposed daily fees + 11% (effective July 1st, 2018)**	**Dépôt de sécurité requis/Security deposit required**
Bambin 18 à 30 mois Toddler 18 to 30 months	52.05$	520.05$
Préscolaire 30 mois à parascolaire Preschool 30 months to School age	50.10$	501.00$
(AM/PM) Parascolaire Journée d'école School age School day	22.20$	222.00$
(AM or/PM) Parascolaire Journée d'école School age School day	16.65$	166.50$
Parascolaire Pleine jounée/Full days	31.25$	312.50$
Paiement en retard/ Late payment fee	• Un intérêt de 1.25% par mois sera appliqué sur les comptes échus. • 10$ pour l'état de compte qui est émis pour les comptes en souffrance. • 20$ pour les appels. Ces appels sont généralement faits vers le 15 du mois suivant la date due de la facture. • 30$ pour la lettre, avisant que le parent n'est plus éligible au service de garde, qui est préparé lorsque le paiement n'est toujours pas reçu. • 30$ ouverture de nouveau compte. / • A monthly interest of 1.25% will be applied to all accounts in arrears. • 10$ for the statement sent out because of late payment. • 20$ for a call. Those calls are usually made around the 15 of each month following the due date of the invoice. • 30$ for a letter, informing the parents that they are no longer eligible at the day care service, prepared when the payment has not been received. • 30$ opening of new account.	

Schedule ‘D’ to By-law no. 2015-176, as amended by 2017-157
Annexe ‘D’ au règlement no. 2015-176, tel que modifié par 2017-157

Tarifs passes d’autobus / Bus pass fees **(effectif le 1er janvier 2018 / effective January 1st, 2018)**	
Adulte/Adult	243.00$
Étudiant/Student	175.00$
Journalier/Daily	15.00$
Livret de billets journalier/Booklet of daily tickets	205.00$

SCHEDULE "E" TO BY-LAW 2015-176, AS AMENDED BY BY-LAW 2018-33

TARIFS DE LOCATION – SURFACES DE BÉTON
RENTAL FEES – SLAB

	Associations de sport mineur local Local minor sport associations	***Autres*** Others
Heures de pointes Prime Time Hours	45 $/h	60 $/h
Heures creuses Down Time Hours	40 $/h	50 $/h

TARIFS DE LOCATION – ÉVÉNEMENTS SPÉCIAUX – SURFACE DE BÉTON
RENTAL FEES – SPECIAL EVENT - SLAB

	Tarifs Fees
Évènement sans boisson Event without alcool	500 $/jour - Day
Évènement avec boisson Event with alcool	600 $/jour - Day
Frais d'installation Set-up fees	35 $/h

SCHEDULE « F » TO BY-LAW 2015-176
as amended by By-law No. 2017-20

RAMPES DE MISE À L'EAU POUR LES EMBARCATIONS
BOAT RAMPS

TAUX

Frais de tournois par bateau ou activités spéciales	10$

RATES

Tournament fees per boat or special activity	$10

SCHEDULE “G” TO BY-LAW 2015-176

PUBLICITY ON THE CRTRANSPO BUSES AND BUS SHELTERS

Rates of advertising

Bus shelters
1300$ annually or 200$ monthly

Buses
For the buses, the following rates will apply.

Interior Card

- Standard – one sign - $75 monthly (1 bus) or 100$ monthly (2 buses)
- Super interior card – two signs – 100$ monthly (1 bus) or 125$ monthly (2 buses)

Decal on buses - 6 or 12 months contract

- Back, side of bus or front side window – 175$ monthly
- Side windows – 125$ monthly
- Oversized sides (one window + one side of bus) – 225$ monthly

Decal on buses – 12 month contract only

- Full wrap – 500$ monthly

Schedule "H" to By-law 2015-176
Classes of Permits and Permit Fees

Class of Permit	Base Line Fee	Additional Fees
Group "C" Low Density Residential (single family dwellings)	$ 1479.00 up to 1,500 sq/ft in *gross building area*	$0.80 per sq/ft for buildings with a floor area over 1,500 sq/ft
Group "C" Multiple Residential	$ 1,530.00 up to 1,500 sq/ft in *gross building area*	$1.15 per sq/ft for buildings with a floor area over 1,500 sq/ft
Group "C" Residential Additions and *Major Alterations*	$ 638.00 up to 750 sq/ft in *gross building area*	$0.75 per sq/ft for buildings with a floor area over 750 sq/ft
Group "C" Residential garage, carport, acc. building, deck, minor alteration	$ 153.00 up to 300 sq/ft in *gross building area*	$0.40 per sq/ft for buildings or structures with a floor area over 300 sq/ft
Group "A", "B", "D", "E" and "F" New Construction	$ 4,590.00 up to **5,000** sq/ft in *gross building area*	$1.40 per sq/ft for buildings with a floor area over **5,000** sq/ft
Group "A", "B", "D", "E" and "F" Additions and *Major Alterations*	$ 2,040.00 up to **2,500** sq/ft in *gross building area*	$1.40 per sq/ft for buildings with a floor area over **2,500** sq/ft
Group "A", "B", "D", "E" and "F" accessory building, minor alterations	$ 459.00 up to **1,500** sq/ft in *gross building area*	$0.40 per sq/ft for buildings with a floor area over **1,500** sq/ft
Farm Buildings (for animals) Farm Buildings (storage, without animals) Fabric covered steel truss Buildings (COVER ALL)	$ 1020.00 up to 5,000 sq/ft in *gross building area* $ 816.00 up to 5,000 sq/ft in *gross building area* $ 306.00 Fixed fee	$0.20 per sq/ft for buildings with a floor area over 5,000 sq/ft $0.15 per sq/ft for buildings with a floor area over 5,000 sq/ft
Lagoons	Fixed fee of $ 357.00	
Silos	Fixed fee of $ 204.00	
Designated Structures Residential (OBC)	Fixed fee of $ 204.00	
Designated Structures Other(OBC)	Fixed fee of $ 408.00	
Solid fuel burning appliance	Fixed fee of $ 204.00	
Change of Use / Conditional permits	Fixed fee of $ 255.00	
Other Permits: Permit renewal (10.1) Transfer of permit (11.2) Revision to permit *Temporary structures*	Fixed fee of $ 153.00	
Demolition (Residential)	Fixed fee of $ 204.00	
Demolition (Other)	Fixed fee of $ 408.00	
Plumbing	$15.30 per fixture	
Connection fees (water, sewer, storm	$51.00 per connection	
Foundation (partial permit)	Additional fee of $255.00	
Building without a permit fee	Additional fee of double the permit fee(as set out in this schedule "A") to max of 10,000$	
Use of Large copier machine	A1 format $5.10 each copy A2 format $2.55 each copy	

*Fees may be added to tax roll if not paid as per section 7.(8.1) of the Building Code Act.

Notes to Schedule “H”

Note Group “A” buildings: Assembly occupancies
Group “B” buildings: Detention, care and treatment occupancies
Group “C” buildings: Residential occupancies
Group “D” buildings: Business and personnel services occupancies
Group “E” buildings: Mercantile occupancies
Group “F” buildings: Industrial occupancies;
As defined under Division A, article 1.4.1.2 of the Ontario Building Code

ANNEXE "I" du règlement 2015-176, tel qu'amendé par le règlement 2015-160
SCHEDULE "I" to by-law 2015-176, as amended by by-law 2015-160

1. *OFFICIAL PLAN AMENDMENT / MODIFICATION AU PLAN OFFICIEL*

$4,000.00

2. *ZONING BY-LAW AMENDMENT / MODIFICATION AU RÈGLEMENT DE ZONAGE*

$2,600.00

Zoning by-law amendment following a condition of severance / Amendement au règlement de zonage suite à une condition de morcellement

$1,000.00

TEMPORARY USE / UTILISATION TEMPORAIRE

$1,650.00

HOLDING PROVISION / UTILISATION DIFFÉRÉE

$700.00

3. *SUBDIVISION APPLICATION / DEMANDE DE LOTISSEMENT*

i) Fees payable at submission of the application / Les frais sont payables à la soumission de la demande

Draft Plan of Subdivision / Ébauche de plan de lotissement

$140.00 / dwelling unit or block *(Minimum of $2,500.00)* / par unité d'habitation ou par bloc *(2 500,00 $ minimum)*

Submission of the Draft Plan of Subdivision following the lapse of approval of the Draft Plan of Subdivision
Soumission d'une ébauche de plan de lotissement suite à la caducité de l'approbation de l'ébauche de plan de lotissement

$70.00 / dwelling unit or block *(Minimum of $1,000.00)*
/ par unité d'habitation ou par bloc *(1 000,00 $ minimum)*

Revision of a Draft Plan of Subdivision Révision
d'une ébauche de plan de lotissement

$80.00 / dwelling unit or block *(Minimum of $2,500.00)*
/ par unité d'habitation ou par bloc *(2 500,00 $ minimum)*

Amendment to the Subdivision Agreement / Amendement à l'entente de lotissement

$1,000.00

Engineering Fee
Frais d'ingénierie

$4,000.00 (for two reviews and $322.53 for each review after)
(pour deux révisions et 322.53 $ pour chaque révision subséquente)

All the consultant fees collected for the review of plans and studies will be the responsibility of the applicant.
Tous les honoraires de consultant pour la révision des plans et des études seront la responsabilité du demandeur.

ii) Fees payable at Subdivision Agreement Stage /
Les frais sont payables lors de la préparation de l'entente de lotissement

Detailed Engineering Review and Work Surveillance
Révision des plans d'ingénierie et surveillance des travaux

2.5% of the estimated cost of the site works
2.5 % du coût des travaux évalués

(Any and all consultant fees collected for the review and the work surveillance will be the responsibility of the applicant and deducted

from the total engineering fees calculated for the project.)
(Tous les honoraires de consultant pour la révision et la surveillance des travaux seront la responsabilité du demandeur et déduits du total des honoraires d'ingénierie calculés pour le projet.)

Subdivision Agreement Preparation Fee /
Frais pour la préparation de l'entente de lotissement

$2,200.00

Administration Fees / Frais administratifs

$3,200.00

Legal Fees / Frais légaux

$4,000.00

4. SITE PLAN APPLICATION / DEMANDE DE PLAN D'IMPLANTATION

i) Fees payable at submission /
Les frais sont payables à la soumission de la demande

Residential / Résidentiel

$140.00 / dwelling unit *(Minimum of $1,000.00)*
/ par unité d'habitation *(1 000,00 $ minimum)*

Commercial, Industrial, Institutional and other non-residential proposal
Commercial, industriel, institutionnel et pour les projets autres que résidentiels

$1,000.00 Less than 5000 square feet / moins de 5000 pieds carrés

$1,500.00 5000 square feet and up / 5000 pieds carrés et plus

Mixed use / Usage mixte

$1,000 + $140,00 per residential unit / par unité résidentielle

Minor Amendment to an existing registered Site Plan Agreement

Modification mineure à une entente de plan d'implantation enregistrée

$550.00

Creation of/or addition to private parking area
Création ou addition à une aire de stationnement privée

$550.00

City Engineering Fee / Frais d'ingénierie

$550.00 + $1000 deposit that will be deducted from the Engineering fees at the time of the signature of the agreement

+ 1000,00$ dépôt qui sera déduit des frais d'ingénieries au moment de la signature de l'entente

ii) Fees payable at Site Plan Agreement Stage
Les frais sont payables lors de la préparation de l'entente

4% of the estimated cost of the site works up to $100,000.00
4 % du coût des travaux évalués jusqu'à 100 000,00 $

3% of the estimated cost of the site works between $100,000.00 to $500,000.00
3 % du coût des travaux évalués entre 100 000,00 $ et 500 000,00 $

2% of the estimated cost of the site works over $500,000.00
2 % du coût des travaux évalués à plus de 500 000,00 $

(Any and all consultant fees collected for the review of plans and studies will be the responsibility of the applicant and deducted from the total engineering fees calculated for the project.)
(Tous les honoraires de consultant pour la surveillance des travaux seront la responsabilité du demandeur et déduits du total des honoraires d'ingénierie calculés pour le projet.)

5. PLAN OF CONDOMINIUM / PLAN DE CONDOMINIUM

Plan of Condominium / Plan de condominium

$135.00 / dwelling unit *(Minimum of $1,000.00)*

par unité d'habitation *(1 000,00 $ minimum)*

Exemption of a Plan of Condominium /
Exemption d'un plan de condominium

$1,000.00

Condominium conversion / Conversion de plan de condominium

$550.00

6. MULTIPLE APPLICATIONS / DEMANDES MULTIPLES

When an applicant submits more than one application type per site, then the applicant is entitled to a 10% discount on each application.

Lorsque le demandeur soumet plus d'un type de demande pour le même site, alors celui-ci a droit à une réduction de 10 % sur chaque demande.

7. REQUEST TO EXTEND DRAFT APPROVAL / DEMANDE POUR UNE PROLONGATION DE L'APPROBATION D'UNE ÉBAUCHE

$870.00 *(Subdivision or Site Plan)*
(Lotissement ou plan d'implantation)

8. LAND SEVERANCE OR CONSENT / DEMANDE DE MORCELLEMENT

Creation of a new lot / Création d'un nouveau terrain

$1,200.00 File / par filière

Other requests (lot enlargement, lot surplus, etc.) / Autres demandes (agrandissement de terrain, lot de surplus etc.)

$850.00 File / par filière

Changes to conditions after provisional consent given by the Committee / Modification aux conditions après l'approbation préliminaire donnée par le comité

$350.00

9. MINOR VARIANCE APPLICATION / DEMANDE DE DÉROGATION MINEURE

$700.00 File / par filière

10. PART-LOT CONTROL / RETRAIT DES PARTIES DE LOT

$550.00 File / par filière

11. RELEASE OF FINANCIAL SECURITIES / LIBÉRATION DE GARANTIES BANCAIRES

$230.00 *(Per application for partial or full release of financial securities for Subdivision and Site Plan.)*
(Pour chaque demande de libération partielle ou complète des garanties bancaires reliées à un projet de lotissement ou à un plan d'implantation.)

12. CASH-IN-LIEU OF PARKING / COMPENSATION EN LIEU DE STATIONNEMENT

$435.00 *(per application / par demande)*

(Each space reduced by Council shall be valued at $1,689.82 and payable as per Council's decision.)
(Chaque place de stationnement réduite par le Conseil est évaluée à 1 689,82 $ et doit être payée, selon la décision du Conseil.)

13. LETTER OF UNDERTAKING / LETTRE D'ENGAGEMENT

$225.00

14. LIFTING OF 0.30 METER RESERVE /

RETRAIT D'UNE RÉSERVE DE 0,30 MÈTRE

$350.00 *(per application / par demande)*

15. ENCROACHMENT / EMPIÉTEMENT DU DOMAINE PUBLIC

$325.00 *(per application / par demande)*

16. DEDICATION OF PUBLIC HIGHWAY & ASSUMPTION OF SUBDIVISION / DÉDICATION DES VOIES PUBLIQUES ET DES LOTISSEMENTS

$150.00 *(per application / par demande)*

(The applicant assumes the legal and surveying fees.)
(Les frais légaux et d'arpentage doivent être payés par le demandeur.)

17. STUDY OR VALIDATION REPORT FOR EACH APPLICATION RELATED TO PLANNING MATTERS / ÉTUDE OU RAPPORT DE VALIDATION RELIÉS À DES QUESTIONS D'AMÉNAGEMENT

Cost of study or report. / Coût de l'étude ou du rapport.

18. RESPONSE TO WRITTEN REPLIES / RÉPONSE AUX REQUÊTES ÉCRITES

Zoning Report Rapport de zonage	$110.00
Compliance report Rapport de conformité	$110.00
Subdivision compliance Conformité à un lotissement	$90.00
Work Order Ordre de remédier	$90.00

à des travaux

Written opinions
$65.00 + $105.40 *per hour after the first hour, if required*

Opinion écrites

+ 105.40 $ *l'heure après la première heure, si nécessaire*

If the request is for more than one property (several vacant lots in same subdivision) the fees are $10.53 per extra lot.
Si la demande est pour plus d'une propriété (plusieurs lots vacants à l'intérieur d'un même lotissement) les frais seront de 10,53 $ pour chaque lot supplémentaire.

19. ROAD OPENING OR ROAD CLOSING / OUVERTURE OU FERMETURE DE RUE

$1,100.00 *(per application / par demande)*

20. SIGN PERMIT / PERMIS D'ENSEIGNE

Permanent Sign / Enseigne permanente

$120.00 + $20.00 for an additional sign within same permit application/ + 20,00 $ pour toute enseigne additionnelle sous la même demande de permis

Temporary Sign / Enseigne temporaire

$120.00 (for the 1st application of the year / pour la première application dans l'année)

$60.00 (for any subsequent permit request in that same year / pour toutes demande de permis ultérieur dans la même année)

Sign permit when sign is already installed / permis d'enseigne lorsque l'enseigne est déja installée

$150.00 + $30.00 for an additional sign within same permit application/ + 30,00 $ pour toute enseigne additionnelle sous la même

demande de permis

Variance to the Sign By-law / Dérogation au règlement sur l'affichage

$200.00

Variance to the Sign By-law after sign is installed / Dérogation au règlement sur l'affichage après l'installation de l'enseigne

$400.00

Encroachment permit for a sign / Permis d'empiétement pour une enseigne

$200.00

Renewal of Encroachment permit / Renouvellement du permis d'empiétement

$100.00 per year/par année

21. ARCHIVAL RETRIEVAL FEE / RECHERCHE DANS LES ARCHIVES

When a request in writing is made to the Planning Department to retrieve a file located within the City's archives, then the person, Corporation or agency making the request shall be charged a fee of $110.00.

Lorsqu'une demande écrite est présentée au Service de l'aménagement du territoire pour obtenir un document classé dans les archives de la Cité, alors la personne, la société ou l'agence qui a présenté la demande devra débourser 110.00$.

22. REFUNDS / REMBOURSEMENTS

100% If the request is made before the application is placed on technical circulation.
Si la demande est présentée avant le début de la procédure de circulation.

30% If request is made after the technical circulation.
Si la demande est présentée suite à la procédure de circulation.

Nil If request is made after the required public meeting.

Si la demande est présentée suite à la tenue de la réunion publique.

23. ONTARIO MUNICIPAL BOARD / COMMISSION DES AFFAIRES MUNICIPALES DE L'ONTARIO

Applicants agree to pay all costs incurred by the City if the City has substantially agreed with their application and the applicant's request has been appealed to the OMB.

Les demandeurs consentent à payer tous les coûts encourus par la Cité si la Cité a supporté et approuvé leur demande lorsqu'un appel a été logé à la CAMO concernant ladite demande.

24. COPIES OF CITY DOCUMENTS / COPIES DE DOCUMENTS DE LA CITÉ

Official Plan of the Urban Area of the City of Clarence-Rockland Plan officiel de l'aire urbaine de la Cité de Clarence-Rockland	$35.00
Official Plan of Bourget Plan Officiel de Bourget	$35.00
Zoning By-law Règlement de zonage	$35.00
CD of Zoning By-law or Official Plan CD du Règlement de zonage ou du Plan officiel	$15.00

Schedules of Zoning By-law / Cédules du Règlement de zonage

i) small format (11 inches X 17 inches) petit format (11 pouces X 17 pouces)	$4.30 *(each schedule)* *(chaque cédule)*
(or smaller) *(ou plus petit)*	+ $2.15 *if in colour* *en couleur*
ii) large format (2 feet X 3 feet) grand format (2 pieds X 3 pieds)	$6.46 *(each schedule)* *(chaque cédule)*
	+ $2.15 *if in colour* *en couleur*

25. OTHER REQUEST / AUTRES DEMANDES

$220.00

26. DEVELOPMENT CHARGE DEFERRAL FEE / FRAIS POUR DIFFÉRER LE PAIEMENT DES REDEVANCES D'EXPLOITATION

$225.00

27. DEVELOPMENT AGREEMENT / ENTENTE DE DÉVELOPPEMENT

$225.00

Schedule 'J' TO BY-LAW 2015-176

USER FEES – CORPORATE SERVICES

USER FEES FOR COMMISSIONER OF OATH SERVICES	
Commissioning of municipal documents	No Fee
Commissioning of residency verification for pension purposes	No Fee
All other documents that may be acceptable to the Commissioner	$20.00 per document
DEATH REGISTRATIONS	
death notice submitted by Funeral Homes within the City of Clarence-Rockland	$25.00 for each
death notice submitted by Funeral Homes outside the limits of the City of Clarence-Rockland	$40.00 for each
MARRIAGE LICENCES	
Licence fee for marriage Licence	$125.00

ANNEXE "K" / SCHEDULE "K"

to By-law no. 2015-176/ au règlement no. 2015-176
as amended by By-Law 2016-07/ tel que modifé par le règlement 2016-07

USER FEES – FINANCE DEPARTMENT

NSF Charge	$ 40.00
Returned Item	$ 40.00
TC Tax & Water Certificates	$ 60.00 each
TI Tax inquiries (Print-Outs Tax-Water-Ar)	$ 5.00 each
Duplicate receipt or bill	$ 5.00 each
Statement of Taxes-Water-Ar account (other than owner)	$ 35.00 each
Statement of Taxes-Water-Ar account- owner each (except those in arrears)	$ 30.00
Verification of local improvements (other than owners)	$ 30.00 each
Property search fee & archives searches	$ 30.00 each
Update Mortgage Co. Information (new or change)	$ 30.00 each
Print of copies of assessment view	$ 30.00 each
Account creation or name change	$ 30.00 each
Transfers between all accounts	$ 30.00 each

Schedule 'L' TO BY-LAW 2015-176

OPEN AIR BURNING PERMIT FEES

Permit Fee	
$25.00	One full year
$25.00	Special Permit

Schedule 'M' TO BY-LAW 2015-176

BUSINESS LICENCE FEES

LICENCE & BUSINESS CATEGORY	LICENCE FEES	REVISED APPROVAL/INSPECTIONS	EXPIRY DATE
Seasonal	$60.00 (In operation less than 6 consecutive months)	Zoning, Finance, may require Written permitting private land owner	As specified
Seasonal Produce Vendor	$60.00 (In operation less than 6 consecutive months)	Zoning, Finance, may require Written permitting private land owner	As specified
Home occupation	$60.00 Annually	Zoning, Finance, Fire	September 30th
Food/Beverage Service	$100.00 Annually	Zoning, Finance, Fire, Health Unit, may require Liability Insurance $1,000,000	September 30th
Automotive Service	$100.00 Annually	Zoning, Finance, Fire, may require MTO Certification, MOE Drive Clean Certificate, Liability Insurance - $1,000,000	September 30th
General	$100.00 Annually	Zoning, Finance, may require Fire	September 30th
Trades & Contractors	$100.00 Annually	Zoning, Finance, may require Fire, Liability Insurance $1,000,000, (may require criminal check)	September 30th
Recreations	$100.00 Annually	Zoning, Finance, may require Fire, Health Unit, MTO, Liability Insurance $1,000,000	September 30th
Mobile Sales/Service	$100.00 Annually	Zoning, Finance, may require Fire, Health Unit, MTO, Liability Insurance $1,000,000	September 30th
Amusement	$300.00	Zoning, Finance, may require Community and Recreational Written permitting private land owner, Fire, Health Unit, Liability Insurance	As specified

		$5,000,000, Technical Standard and Safety Authority (TSSA) Certification, Certification Ontario Amusement Devices permits	
Entertainment	$500.00	Zoning, Finance, may require Fire, Health Unit, Liability Insurance $1,000,000	As specified
Transient Trader	$150.00 Annually	Zoning, Finance, may require Written permitting private land owner	As specified
Transient Trader – Special Event	$300.00 Annually or $60.00 per day	Zoning, Finance, may require Community and Recreational Written permitting private land owner, Fire, Health Unit, Liability Insurance $5,000,000, Technical Standard and Safety Authority (TSSA) Certification, Certification Ontario Amusement Devices permits	As specified
Itinerant Vendor	$300.00	Zoning, Finance, may require Fire, Health Unit, Liability Insurance $1,000,000	As specified
Auctioneer	$200.00 Annually or $80.00 per day	Zoning, Finance, may require Written permitting private land owner	As specified
SERVICE	**APPLICABLE FEES**		
Application Fee	$50.00	N/A	N/A
Change of name	$25.00	N/A	N/A
Change of address	$25.00	N/A	N/A
Change of ownership	$25.00	N/A	N/A
Late Fee	$10.00/+30 days $25.00/+60 days $45.00/+90 days	N/A	N/A

SCHEDULE « M » TO BY-LAW 2015-176
as amended by By-law No. 2018-136

BUSINESS LICENCE FEES

LICENCE & BUSINESS CATEGORY	LICENCE FEES	REVISED APPROVAL / INSPECTIONS	EXPIRY DATE
Seasonal	$60.00 (In operation less than 6 consecutive months)	Zoning, Finance, may require Written permitting private land owner	As specified
Seasonal Produce Vendor	$60.00 (In operation less than 6 consecutive months)	Zoning, Finance, may require Written permitting private land owner	As specified
Home occupation	$60.00 Annually	Zoning, Finance, Fire	September 30th
Food/Beverage Service	$100.00 Annually	Zoning, Finance, Fire, Health Unit, may require Liability Insurance $1,000,000	September 30th
Automotive Service	$100.00 Annually	Zoning, Finance, Fire, may require MTO Certification, MOE Drive Clean Certificate, Liability Insurance - $1,000,000	September 30th
General	$100.00 Annually	Zoning, Finance, may require Fire	September 30th
Trades & Contractors	$100.00 Annually	Zoning, Finance, may require Fire, Liability Insurance $1,000,000, (may require criminal check)	September 30th
Recreations	$100.00 Annually	Zoning, Finance, may require Fire, Health Unit, MTO, Liability Insurance $1,000,000	September 30th
Mobile Sales/Service	$100.00 Annually	Zoning, Finance, may require Fire, Health Unit, MTO, Liability Insurance $1,000,000	September 30th
Amusement	$300.00	Zoning, Finance, may require Community and Recreational	As specified

		Written permitting private land owner, Fire, Health Unit, Liability Insurance $5,000,000, Technical Standard and Safety Authority (TSSA) Certification, Certification Ontario Amusement Devices permits	
Entertainment	$500.00	Zoning, Finance, may require Fire, Health Unit, Liability Insurance $1,000,000	As specified
Transient Trader	$150.00 Annually	Zoning, Finance, may require Written permitting private land owner	As specified
Transient Trader – Special Event	$300.00 Annually or $60.00 per day	Zoning, Finance, may require Community and Recreational Written permitting private land owner, Fire, Health Unit, Liability Insurance $5,000,000, Technical Standard and Safety Authority (TSSA) Certification, Certification Ontario Amusement Devices permits	As specified
Itinerant Vendor	$300.00	Zoning, Finance, may require Fire, Health Unit, Liability Insurance $1,000,000	As specified
Auctioneer	$200.00 Annually or $80.00 per day	Zoning, Finance, may require Written permitting private land owner	As specified
SERVICE	**APPLICABLE FEES**		
Application Fee	$50.00	N/A	N/A
Change of name	$25.00	N/A	N/A
Change of address	$25.00	N/A	N/A
Change of ownership	$25.00	N/A	N/A
Late fee	$25.00	N/A	N/A

ANNEXE "N" / SCHEDULE "N"
to By-law no. 2015-176/ au règlement no. 2015-176
as amended by By-Law 2016-07/ tel que modifé par le règlement 2016-07

DOG LICENSING

A) Licence fee:

i)	male or female dog	$ 25.00
ii)	for any dog per household for handicapped person (with proof)	no fee
iii)	late registration fee an additional	$ 20.00
iv)	dog tag replacement	$ 5.00
v)	kennel licence	$ 50.00

B) Release fee:

i)	First release	$ 73.00
ii)	Second and subsequent release	$ 113.00

C) *Adoption fee:*

i)	for each dog (male or female)	$ 25.00

Schedule 'O' to By-law 2015-176

TAUX TERRAINS SPORTIFS
CITÉ DE CLARENCE-ROCKLAND

Terrains sportifs	Saisonniers	Tournoi /Location
Associations de sport mineures Clarence-Rockland **Terrains de balle** **Terrains de soccer**	**Taux 2013 à avril 2016** $25.00 / Location	**Taux 2013 à avril 2016** $70.00 / journée $20.00 / soirée seulement
	Taux 2016 $30.00 / Location	**Taux 2016** $75.00 / Journée $20.00 / Soirée seulement
Ligues d'adultes **Terrain de balle**	**Taux 2013 à avril 2016** $35.00 / Location	**Taux 2013 à avril 2016** $140.00 / journée et soirée $35.00 / soirée seulement
	Taux 2016 $40.00 / Location	**Taux 2016** $160.00 / journée et soirée $40.00 / soirée seulement
Ligues d'adultes **Terrains de soccer**	**Taux 2013 à avril 2016** $35.00 / Location de jour $40.00 / Location de soirée	**Taux 2013 à avril 2016** $140.00 / journée et soirée $40.00 / soirée seulement
	Taux 2016 $40.00 / Location de jour $45.00 / Location de soirée	**Taux 2016** $160.00 / journée et soirée $50.00 / soirée seulement

Schedule 'P' to By-law 2015-176

Taux de location des salles communautaires

Arénas Clarence Creek et Jean-Marc Lalonde **Organisme sans but lucratif reconnu** **Recognized non-profit organizations**	**2016**
Réunion / Déjeuner Meeting / Breakfast	30$
Carnaval Carnival	120$/jour $120/day

Autre organisme / particulier **Other organizations / individuals**	**2016**
Activité sans boisson Activity without alcohol	40$/heure $40/hour
Activité avec boisson Activity with alcohol	60$/heure $60/hour
Funérailles Funerals	120$ $120

Centres Ronald Lalonde et Alphonse Carrière / Ronald Lalonde and Alphonse Carrière Community Centres	**2016**
Réunion Associations/Paroisses seulement Meetings Assocations/Parishes only	30$/max. de 3 heures $30/max of hours
Déjeuner/Dîner Associations/Paroisses seulement Breakfast / Dinner Associations/Parishes only	35$
Funérailles / Funerals	110$
Autres activités / Others activities Activité sans boisson Activity without alcohol	30$/heure $30/hour
Autres activités / Others activities Activité avec boisson Activity with alcohol	35$

Centre Chamberland et Local Optimiste St-Pascal Baylon Chamberland Centre and St-Pascal Optimist Hall	**2016**
Atelier Associations/Paroisses seulement Workshop Associations/Parishes only	30$/max. de 3 heures $30/max of 3 hours
Autres activités / Other activities	80$

SCHEDULE "Q" TO BY-LAW 2015-176, as amended by-law 2018-33

FEES, CHARGES AND SURCHARGES

1. FEES

Material Type	*Current Rate*	*Minimum Charge*
Yard Waste	Free	N/A
Branches up to 12″ in diameter	Free	N/A
Household Hazardous Waste	Free	N/A
Blue and black box recyclables	Free	N/A
Scrap metal (without refrigerants)	Free	N/A
Tires	Free	N/A
Textiles	Free	N/A
Electronics	Free	N/A
Bale wrapping	Free	N/A
Weigh only ticket	$20.00 per ticket	$20.00 per ticket
Items containing refrigerants	$20.00 per item	$ 20.00 per item
Cover alternative and concrete	$45.00 per tonne	$20.00
Construction wood	$45.00 per tonne	$20.00
Residential, Commercial, Construction and Demolition Waste (not defined as mixed loads)	$90.00 per tonne	$20.00
Mixed loads	$135.00 per tonne	$20.00
Contaminated soils	$135.00 per tonne	$20.00
Asbestos	$ 300.00 per tonne	$20.00 + surcharge

2. SURCHARGES

Surcharge Type	*Rate*	*Minimum Charge*	*Maximum Charge*
Extended opening hours	$110 per hour	$330 per day	N/A
Hazardous waste in load	$10 per item	$30 per load	$300 per load*
Electronic waste surcharge	$30 per item	$30 per load	$300 per load*
Refrigerant surcharge	$30 per item	$30 per load	$300 per load*
Tires Surcharge	$30 per tire	$30 per load	$300 per load*
Administrative billing surcharge	$50 per visit	N/A	N/A

*Does not include payment for removal and associated administrative surcharge of 25%, if required.

3. In the event the scale is not operable, fees shall be calculated using a ratio of 0.2 tonnes per cubic meter for uncompressed loads and 0.4 tonnes per cubic meters for compressed loads.

Clarence-Rockland

RAPPORT N° FIN2019-001

Date	23/01/2019
Soumis par	Frédéric Desnoyers
Objet	Ontario Regulation 284/09
# du dossier	F05 Budget and estimates

1) **NATURE / OBJECTIF :**
Le but de ce rapport est d'expliquer le Règlement de l'Ontario 284/09, illustrer l'impact sur le budget 2019 si toutes ces charges auraient été incluses, et de faire adopter le rapport annuel 284/09, par le Conseil.

2) **DIRECTIVE/POLITIQUE ANTÉCÉDENTE :**
N/A

3) **RECOMMANDATION DU SERVICE:**
QU'IL SOIT RÉSOLU QUE le rapport préparé selon le Règlement de l'Ontario 284/09 pour le budget 2019, soit adopté tel que présenté à l'annexe « A » du rapport no. FIN2019-001.

BE IT RESOLVED THAT the report prepared as per Ontario Regulation 284/09 for the 2019 budget, be adopted as per Schedule 'A' to Report no. FIN2019-001.

4) **HISTORIQUE :**
Chaque année, en vertu du règlement 284/09, une municipalité devrait faire approuver avant son budget, un rapport annuel pour démontrer les écarts entre le budget et la comptabilité d'exercice. Celui-ci n'était pas préparé anciennement mais sera dorénavant préparé à chaque année.

5) **DISCUSSION :**
Lors de la préparation d'un budget pour une année, une municipalité à la possibilité, selon le Règlement de l'Ontario 284/09, d'exclure certaines ou toutes les charges suivantes du total estimé :

- Charges d'amortissement ;
- Charges pour les avantages postérieurs à l'emploi ;
- Charges pour fermeture et après-fermeture de dépotoir.

Si exclues, le règlement exige que le Conseil adopte un rapport annuel qui inclut :

- Un estimé de l'impact sur l'excédent accumulé résultant de l'exclusion des charges ;

- Une analyse de l'estimé de l'impact de l'exclusion des charges sur les besoins de financement futurs des immobilisations corporelles.

Également, le rapport annuel doit être préparé et adopté par une résolution du Conseil avant l'approbation du budget municipal.

Les charges d'amortissement ne sont pas incluses dans le budget de la Cité mais les charges pour les avantages postérieurs à l'emploi et de fermeture et après-fermeture du dépotoir le sont.

La Cité, comme la plupart des municipalités, continuent de préparer les budgets selon la méthode de comptabilité de caisse qui consiste à balancer les revenus et charges d'opérations et capitales. Le Règlement de l'Ontario exige que la municipalité identifie l'impact du budget 2019 sur l'excédent accumulé après avoir converti le budget 2019 à la comptabilité d'exercice.

Impact des charges exclues sur l'excédent accumulé de 2019 :
L'impact sur l'excédent de l'exercice, tel que démontré à l'annexe A, représente un montant de 1 850 020 $.

Impact sur le financement futur des immobilisations corporelles :
Inclure le coût d'amortissement dans les états financiers peut donner une idée sur le coût des actifs. Cependant, l'amortissement est calculé sur le coût historique des actifs et ainsi même si on semble avoir un surplus après avoir inclus l'amortissement, il existe tout de même des défis à long terme. En effet, la Cité a plusieurs actifs vieillissant qui coutera beaucoup plus cher à remplacer que le coût historique.
Pour éviter une augmentation majeure du taux de taxes, la Cité devraient faire des transferts plus importants aux réserves. Le plan de gestion des immobilisations assistera le Conseil à prendre des décisions stratégiques financières à long terme. Tel que déjà mentionné, il y a un manque à gagner dans les investissements de nos immobilisations corporelles.

6) **CONSULTATION :**
N/A

7) **RECOMMANDATION OU COMMENTAIRES DU COMITÉ :**
N/A

8) **IMPACT FINANCIER (monétaire/matériaux/etc.):**
Tel que présenté dans ce rapport.

9) **IMPLICATIONS LÉGALES :**
N/A

10) **GESTION DU RISQUE (RISK MANAGEMENT) :**
N/A

11) **IMPLICATIONS STRATÉGIQUES :**
N/A

12) **DOCUMENTS D'APPUI:**
Annexe A – Rapport annuel 284/09

Annexe A / Annexe A

Conversion de la comptabilité de caisse à la comptabilité d'exercice
Conversion from Cash to Accrual Accounting

Revenus/Revenues		
	Selon budget proposé	
	As per proposed budget	
	Fonctionnement/Operating	41,847,001
	Immobilisations/Capital	9,330,050
Less/moins:	Transferts provenant d'autres fonds	
	Transfers from other funds	
	Fonctionnement/Operating	-419,363
	Immobilisations/Capital	-3,616,167
	Émission de dette à long terme	
	Proceeds of long term debt	-1,851,000
Revenus totaux/Total Revenues		45,290,521
Charges/Expenses		
	Selon budget proposé	
	As per proposed budget	
	Fonctionnement/Operating	41,847,001
	Immobilisations/Capital	9,330,050
Less/moins:	Transfers to other funds	
	Transferts vers d'autres fonds	-3,394,667
	Immobilisations corporelles	
	Tangible Capital Assets **	-8,596,700
	Paiements capital d'emprunts	
	Debt principal payments	-2,520,183
Charges totales/Total Expenses:		36,665,501
Excédent de l'exercice: Avant les exclusions		
Annual Surplus: Before Exclusions		8,625,020

Annexe A / Annexe A

Conversion de la comptabilité de caisse à la comptabilité d'exercice
Conversion from Cash to Accrual Accounting

Exclusions

Moins/Less:	Amortissement d'immobilisations* Amortization of TCA*	-6,800,000
Exlusions totales/Total Exclusions		-6,800,000
Excédent de l'exercice: Après exclusions **Annual Surplus: After Exclusions**	$	1,825,020

*Estimés / estimates

****Tangible capital assets**

Total 2019 capital budget	$9,330,050

Non-tangible capital assets :

Tous les édifices - conception et impression des plans d'évacuation d'urgence All buildings - design and printing of all the emergency evacuation plans	15,000
Parcs - tables et bancs Parks - tables & benches	25,000
L'accès à distance (VPN) Remote access (VPN)	7,500
Assistance pour l'accès à distance TI Remote IT Assistance	5,000
Revue technologie de la branche d'ingénierie / Engineering branch technology review	50,000
Remplacement du serveur et des pare-feux Replace Server - Firewall	12,000
Prolongement des étagères Shelf extension	3,000
Nouveaux ordinateurs New computers	3,450
Remplacement de mobilier Furniture replacement	2,400
Caméras de corps - Réglementation Body Cameras - By-Law	10,000
Conception partie rue St-Jean - Docteur Corbeil a Poupart Design of part of St-Jean St from Docteur Corbeil to Poupart	400,000
Mise a jour du plan maitre des égouts sanitaire Sanitary sewer master plan upgrade	200,000
Total tangible capital assets	$8,596,700.00

Clarence-Rockland

REPORT N° PRO2019-007

Date	04/02/2019
Submitted by	Brian Wilson
Subject	Fire Station Contingency Approval
File N°	Click here to enter text.

1) **NATURE/GOAL :**
That Council approve the expenditures outlined in report PRO2019-007 for the fire station construction projects in Rockland and Bourget, funded out of the approved contingency amount of the project.

2) **DIRECTIVE/PREVIOUS POLICY :**
Council resolution 2018-110, carried on May 7, 2018, resolved that if the amount allocated in the contingency is not used for unforeseen expenses, that the balance be presented to Council with a list of expenses for consideration.

3) **DEPARTMENT'S RECOMMENDATION :**
THAT Council authorize the Director of Protective Services to approve change orders in the construction of the new fire stations totalling $75,809.69, as outlined in report PRO2019-007, which falls within the overall budget approved for the fire station projects.

QUE le Conseil autorise le Directeur des Services de la Protection d'approuver les avenants pour la construction des nouvelles casernes pour un montant total de 75,809.69 $, comme indiqué dans le rapport PRO2019-007, et qui tombe en dedans du budget total approuvé pour les projets de casernes des pompiers.

4) **BACKGROUND :**
The construction of the two protective services facilities, encompassing the City's fire department, municipal enforcement division, and UCPR's paramedic services is well underway. This project started with a total contingency of $405,629.00. To date, $203,696.54 (+HST) has been spent out of this contingency as approved by Council.

The remaining contingency as of January 29th is $198,265.92.

Due to the nature of a design-build project, in order to ensure that the necessary drawings are updated at the correct time to reflect necessary changes for construction, it is necessary to approve certain change orders which address items which should be reflected on the final 'issue for construction' drawings (e.g. electrical connections, conduits, and so forth).

5) **DISCUSSION :**

The fire station project design is currently at the 99% completed phase, and therefore timing is critical to consider certain components which were removed during the value engineering exercise to get the project within budget. Now that construction has begun at both sites, the larger risks with each site have already been addressed (soil conditions, connection to services such as water, hydro, gas, and so forth). Therefore it is deemed extremely important that Council consider for approval the following items which need to be addressed out of the contingency funds for inclusion in the fire station projects:

TOTAL PROJECT CONTINGENCY	**$405,629.00**
CONTINGENCY ALREADY APPROVED	-$203,696.54
HST ON CONTINGENCY ALREADY APPROVED	-$3,666.54
AVAILABLE CONTINGENCY (JAN 29/19)	**$198,265.92**
Removal of poor fill and construction debris at the Rockland site	$12,172.00
Survey conducted to relocate the Bell and Videotron pedestals from in front of the new Rockland Fire Station	$2,866.31
Information Technology / Audio Visual Changes related to certain equipment requirements and numbers of electrical and data plugs in each station	$1,067.00
Reinstatement of washroom accessories and code requirements (grab bars in accessible washrooms, etc.) in both sites	$5,634.00
Reinstatement of card reader access control at exterior doors for the fire stations (both sites)	$22,869.28
Exterior signage for both stations (the initial contract only identified the CRFD logo, but no wording). Station identification number and signage to label the building (both sites)	$15,689.00
Lighting and required electrical work required for exterior building signage (both sites)	$13,774.48
Installation of hose drying rack on wall in Bourget (hose tower was removed to meet budget requirements)	$1,737.62
TOTAL OF THESE ITEMS	**-$75,809.69**
HST ON THESE ITEMS ($75,809.69 @ 1.8%)	**-$1,364.57**
REMAINING CONTINGENCY	**$121,091.66**

The change order for removal of excess sub-standard fill was originally identified within the value engineering exercise. At that time, the hope had been to reduce trucking costs by trying to find an option to spread this excess fill on the existing City property. During the design phase

of the project, it was identified that this would not be possible for a number of reason, including things such as storm water run off, etc. As such, an arrangement was made with another developer to take this fill to a site in Clarence-Rockland and therefore only the trucking costs had to be paid. These loads were calculated using truck tickets to ensure costs were accurate.

The survey costs relate to conducting a legal survey of the Rockland Hotel de Ville site in order to prepare an easement agreement for the relocation of the Bell and Videotron pedestals which are currently located on the grass in front of where the new station is being constructed. The least expensive option for relocation of these pedestals is to move them in front of City Hall, which required a survey to be conducted. In order to save contractual mark up costs, the City arranged to have Dutrisac conduct the survey, which was recently completed and provided to the City's lawyer for creation of the easement agreement with Bell and Videotron.

The IT/AV costs relate to the minor changes recognized during the design development phase of this project. A number of minor changes to how many plugs and data connections were required, and where certain components were to be located, resulted in a small change order cost for IT/AV items.

The reinstatement of washroom accessories is considered timely to ensure that the completed building meets occupancy requirements. This item was originally identified during the value engineering stage, but given that the project is now well underway, it is advantageous to have the general contractor supply and install the necessary washroom accessories (including bathroom mirrors, toilet paper roll holders, etc. as well as the necessary grab bars and facilities for the accessible washrooms). This change order addresses both the fire and paramedic sides of both stations.

The reinstatement of card reader access for exterior doors only is also recommended at this time so that the necessary conduit and wiring is installed to facilitate FOB or card reader access into the stations. This item had also been removed during the value engineering process. This card reader access drastically improves the security of the facilities by removing keys or door codes which can be lost or otherwise misplaced. This cost covers the installation of the card readers, as well as the system controllers at both locations, addressing exterior door access only.

The change order addressing exterior signage is to supply and install durable plastic lettering on the exterior of the building to identify the buildings as municipal fire stations. This also includes a station number identified (e.g. '3') as has been depicted on the station renderings

produced for the ground breaking ceremonies. The initial contract only included the CRFD logo without the "CLARENCE-ROCKLAND CASERNE 3 FIRE STATION". Accompanying this change order is exterior lighting and wiring to illuminate the signage in the evenings/overnight. These costs cover the supply and installation of the signs as well as the wiring and lighting for the signage, which has been designed to be similar to the UCPR signage being installed for the paramedic sides of the buildings.

The hose drying rack is necessary to properly care for fire hose when wet. The original intention had been to build a hose tower at both locations, but due to budget limitations it was elected to remove these hose towers in favour of smaller hose drying racks at each of the Bourget and Rockland stations, while maintaining a full hose tower at the Clarence-Creek station (centrally located in the municipality).

With both stations currently out of the ground, and underground services already connected at both locations, the project management team is confident that this project will continue and finish within the approved budget established by Council.

It is time sensitive to approve the items noted above so that the final 'issue for construction' drawings can reflect these changes and construction can proceed without incurring additional cost.

6) **CONSULTATION:**
None.

7) **RECOMMENDATIONS OR COMMENTS FROM COMMITTEE/ OTHER DEPARTMENTS :**
None.

8) **FINANCIAL IMPACT (expenses/material/etc.):**
The fire station project is currently operating on budget, and is expected to finish slightly under budget.

9) **LEGAL IMPLICATIONS :**
None.

10) **RISK MANAGEMENT :**
None.

11) **STRATEGIC IMPLICATIONS :**
None.

12) **SUPPORTING DOCUMENTS:**
None.

THE CORPORATION OF THE CITY OF CLARENCE-ROCKLAND

BY-LAW NUMBER 2019-10

BEING A BY-LAW TO ESTABLISH A POLICY FOR EFFECTIVE AND EFFICIENT BILLING AND COLLECTION OF PROPERTY TAXES FOR THE CORPORATION OF THE CITY OF CLARENCE-ROCKLAND.

WHEREAS Part XI of the Municipal Act, 2001, as amended sets out the process for the "Sale of Land for Tax Arrears";

NOW THEREFORE BE IT RESOLVED THAT THE COUNCIL OF THE CORPORATION OF THE CITY OF CLARENCE-ROCKLAND ENACT AS FOLLOWS:

1. **GENERAL PROVISIONS**
The purpose of this by-law is:

1.1 To ensure that municipal tax revenues are collected in a timely and effective manner.

1.2 To ensure that all taxpayers are treated fairly and equitably and to provide staff guidance for decision-making.

1.3 The scope of this document is intended to cover all aspects of the billing and collection of property tax levies and any amounts added as taxes for collection.

2. DEFINITIONS

2.1 **"Cancellation Price"** means an amount equal to all the tax arrears owing at any time in respect of land together with all current real property taxes owing, interest, penalties thereon, and all reasonable costs incurred by the City after the treasurer becomes entitled to register a tax arrears certificate under section 371.

2.2 **"City"** is the Corporation of the City of Clarence-Rockland.

2.3 **"Collection Costs"** means all costs incurred by the City to obtain information for collection purposes and/or collect Tax Arrears including, but not limited to, title search fees, corporate search fees, registered or certified mail, administrative charges, legal costs and tax sale scale of costs.

2.4 **"Extension Agreement"** means a contract between the City with any owner of the land, the spouse of any owner, any mortgagee, any tenant in occupation of the land, or any person the treasurer is satisfied has an interest in the land before the expiry of the one-year period to extend the period of time in which the Cancellation Price is to be paid. The contract is entered into after the registration of a Tax Arrears Certificate and before the expiry of the one-year period following the registration date.

2.5 **"Late Payment Charges"** means penalties and interest applied by the City to unpaid Property Tax accounts, in accordance with section 345 of the Act and applicable City by-laws.

2.6 **"Municipal Tax Sale"** means the sale of land for Tax Arrears according to proceedings prescribed by the Act and Ontario Regulation 181/03.

2.7 **"Notice of Vesting"** means a notice of vesting as prescribed by section 379 of the Act conferring title to the City where there has been no successful tender of a parcel of land and the sale has not been cancelled by the City Treasurer.

2.8 **"Property Taxes"** means the total amount of taxes for municipal and school purposes levied on a property and includes other amounts added to the tax roll as may be permitted by applicable Provincial legislation, including but not limited to outstanding fines under the Provincial Offences Act.

2.9 **"Tax Deed"** is a tax deed as prescribed by Section 379 of the Act and includes the title conferred by the registration of the deed, that which is provided to the successful purchaser of the property after payment of the balance of the Purchase Price.

2.10 **"Tax Arrears"** means any portion of Property Taxes that remain unpaid after the date on which they are due.

2.11 **"Tax Arrears Certificate"** means a document that is registered on title, indicating the described property will be sold by public sale if all Property Taxes are not paid to the municipality within one year of the registration of the certificate.

3. ACCOUNTABILITY AND RESPONSIBILITY

3.1 **The Director, Finance and Economic Development and/or Treasurer is responsible to:**

Ensure that outstanding Property Tax collection processes are performed in accordance with this policy and all applicable legislation.

3.2 **The Tax Analyst/ Collector, is responsible to:**

3.2.1 Ensure this policy remains consistent with current legislation

3.2.2 Ensure applicable staff are aware of and trained on this policy

3.2.3 Communicate any policy revisions to applicable staff, and

3.2.4 Assess overdue property tax accounts to ensure tax collection processes are performed in accordance with this

policy

4. PROCEDURES

Section 5: Tax Billings
Section 6: Penalty/ Interest (Late Payment/ Overdue Charges)
Section 7: Tax Arrears - Collection Process
Section 8: Property Tax Sales Process

5. TAX BILLINGS

5.1 **Interim:** The City will bill for Interim Taxes in February of each year. Billings will be calculated, printed and mailed in accordance with Provincial Legislation. The first due date must be at least twenty-one (21) days after the date of mailing of the tax bill.

5.1.1 **Regular tax accounts** - payment will be due in two (2) instalments, unless unusual or unforeseen administrative, technical or legislative issues result in delay of the interim billing process.

5.1.2 **PTP** Tax Accounts - payment will be due in either a maximum of six (6) payments in the months of January through June or on the same date as the Regular Tax Accounts, depending on which PTP option the taxpayer has selected.

5.2 **Final:** The City will issue Final Tax bills subsequent to approved budgets, requisitions and/or rates of all entities for which the City is required to levy and collect. The first due date must be at least twenty-one (21) days after the date of mailing of the tax bill.

5.2.1 **Regular tax accounts** -Residential- payment will be due in two (2) instalments and also Commercial- payment will be due in two (2) instalments, unless unusual or unforeseen administrative, technical or legislative issues result in delay of the interim billing process.

5.2.2 **PTP (pre-authorized tax payment)** Tax Accounts - payment will be due in either a maximum of six (6) payments in the months of July through December or on the same date as the Regular Tax Accounts, depending on which PTP option the taxpayer has selected.

5.3 **SUPPLEMENTARY TAX BILLINGS:** The Municipal Property Assessment Corporation (MPAC) regularly provides additional assessment data on properties necessitating a supplementary billing. The City will bill for these additional (supplementary) assessments as soon as practical after receipt of the data from MPAC. A maximum of two (2) instalments may be allowed for supplementary billings where the tax account is not on PTP.

Where the account is on PTP a maximum of six (6) instalments may be allowed. Whether the account is Non-PTP or PTP there will be no difference with regard to the total time allowed to complete payment of the full tax amounts. Due dates will be established, so as not to overlap with any previous billing due date(s), where practical. The first due date must be at least twenty-one (21) days after the date of mailing of the supplementary tax bill.

6. PENALTY/ INTEREST (Late Payment/ Overdue Charges)

6.1 All Tax Arrears are subject to Late Payment Charges. A penalty at a rate established by by-law is added to the unpaid amount of a tax instalment on the first day after the instalment due date. In addition, as long as the Property Taxes remain unpaid, interest at a rate established by by-law is added on the first day of each month thereafter. Penalty and interest charges cannot be waived. All Collection Costs incurred by the City to obtain information for collection purposes and/or collect Tax Arrears are payable by the property owner and are added to the tax account.

7. TAX ARREARS - COLLECTION PROCESS - ONGOING STEPS

7.1 Property taxes are a secured special lien on land in priority to any other claim, except a claim by the Crown. Taxes may be recovered with costs as a debt due to the City from the original owner and/or any subsequent owner of the property.

7.2 Property tax payments are applied as follows:

7.2.1 The payment is first applied against any Late Payment Charges according to the length of time the charges have been outstanding, with the charges that have been outstanding the longest being discharged first.

7.2.2 The payment is then applied in the same manner against the Property Taxes owing, with the Property Taxes that have been outstanding the longest being discharged first.

7.3 The City will primarily use the following methods to collect Tax Arrears:

7.3.1 **Verbal communication**

7.3.2 **Overdue notices** - A minimum of one Overdue Notice will be issued each year following the last Final Billing instalment. Overdue Notices will be sent to all taxpayers with an overdue amount greater than ten ($10.00) dollars.

7.3.3 **Payment arrangements** - Staff may enter into payment arrangements at any time prior to the registration of a Tax Arrears Certificate. Payment arrangements must include all Tax Arrears, current taxes, accruing estimates of future taxes and Late Payment Charges and be sufficient to ensure payment in full is realized within a reasonable period of time. Late Payment Charges will continue to accrue during all

such payment arrangements until full payment on the account has been made. Postdated cheques or Preauthorized Payment Plan are the preferred methods of payment.

8. MUNICIPAL TAX SALES PROCESS

8.1 **Municipal Tax Sale Notices**

8.1.1 **Final Notice-Prior to Tax Sale** - In the fourth quarter of each year, Final Notices-Prior to Tax Sale are mailed to those residential property owners approaching three years of Property Taxes in arrears. The Final Notice-Prior to Tax Sale advises that they have thirty (30) days to pay the taxes or enter into a firm, suitable payment arrangement with the City.

8.1.2 **Notice to Interested Parties** - If a residential property owner fails to respond to the Final Notice-Prior to Tax Sale, a property title search is carried out by the City in order to identify all parties with a financial interest in the property. The identified parties are then notified of the Tax Arrears. The Notice to Interested Parties advises that the City intends to proceed with a Municipal Tax Sale and provides interested parties with an opportunity to pay the arrears in order to protect their interest in the property.

8.1.3 **Final Notice-Prior to Tax Arrears Certificate Registration** - If neither the property owner nor interested parties respond to the previous notices, a Final Notice-Prior to Tax Arrears Certificate Registration is issued as one last notification to the property owner of their outstanding balance prior to proceeding with a Municipal Tax Sale.

The Final Notice-Prior to Tax Arrears Certificate Registration advises the property owner that they have 30 days to pay their taxes or enter into a firm, suitable arrangement with the City. Otherwise, the City will register a Tax Arrears Certificate against their property.

8.1.4.1 **Tax Arrears Certificate Registration** - Municipal Tax Sale proceedings can begin once taxes have been in arrears for at least three years. Once all other collection efforts are exhausted, and the City has been unable to secure payment of the Tax Arrears or a firm, suitable repayment plan, the City commences Municipal Tax Sale proceedings by registering a Tax Arrears Certificate against the property.

The City causes a Notice of Registration of Tax Arrears Certificate to be sent to the property owner and all interested parties. If full payment is not received within 280 days of registration of the Tax Arrears Certificate, the City issues a Final Notice to the property owner and all interested parties within 30 days after the expiry of the 280-day period. The notice specifies the date on which the property will be advertised for public sale if the Tax Arrears are not paid or unless the City treasurer agrees to enter into an Extension Agreement.

Once a Tax Arrears Certificate has been registered, only full payment of the Cancellation Price will be accepted unless the City treasurer agrees to enter into an Extension Agreement.

Full payment will be accepted up to the date of transfer of the property following a tax sale. In the event of nonpayment, the City will proceed with a Municipal Tax Sale.

8.1.4.2 **Tax Arrears Certificate Registration of Forfeited Corporate Property** - Municipal Tax Sale proceedings can begin at any time when the property taxes are in arrears. Once all other collection efforts are exhausted, and the City has been unable to secure payment of the Tax Arrears or a firm, suitable repayment plan, the City commences Municipal Tax Sale proceedings by registering a Tax Arrears Certificate against the property.

The City causes a Notice of Registration of Tax Arrears Certificate to be sent to the property owner and all interested parties.. If full payment is not received within 90 days of registration of the Tax Arrears Certificate, the property will be advertised for public sale if the Tax Arrears are not paid or unless the City treasurer agrees to enter into an Extension Agreement. An Extension Agreement can only be entered into if the property owns first obtains consent from The Ministry of Infrastructure to do so.

Once a Tax Arrears Certificate has been registered, only full payment of the Cancellation Price will be accepted unless the Ministry of Infrastructure and the City treasurer agree to enter into an Extension Agreement.

Full payment will be accepted up to the date of transfer of the property following a tax sale. In the event of nonpayment, the City will proceed with a Municipal Tax Sale.

8.2 **Municipal Tax Sale Tender Process**

8.2.1 A Tax Sale of any property is subject to cancellation up to the time of the registration of a Tax Deed or Notice of Vesting without any further notice. If the Cancellation Price is paid before that time, a Cancellation Certificate will be registered. If the Cancellation Price is paid by a party entitled to notice under the Act, they are entitled to a lien on the Cancellation Certificate for the amount they paid. However, if the Cancellation Price paid on a forfeited corporate property which has vested to the Crown, or a property belonging to the Crown belongs to the Crown as a result of the death of an individual who did not have any lawful heirs, they are not entitled to a lien on the Cancellation Certificate for the amount they paid.

8.2.2 The minimum bid is the Cancellation Price.

8.2.3 A separate tender must be provided for each property bid on and must be in the form provided (Form 7 Tender to Purchase). No substitutes can be accepted. There is a fee for each tender package requested.

8.2.4 The tender must be accompanied by a deposit of at least 20% of the tender/bid amount (NOT the Cancellation Price amount) by way of money order or by way of bank draft or cheque certified by a bank or authorized foreign bank within the meaning of section 2 of the *Bank Act* (Canada), a trust corporation registered under the *Loan and Trust Corporations Act* or a credit union within the meaning of the *Credit Unions and Caisses Populaires Act, 1994* payable to the CITY OF CLARENCE-ROCKLAND.

8.2.5 The City is not obliged to provide a survey or reference plan for any parcel of land being sold under tax sale. The Assessment Maps, provided as a courtesy, hereto are not surveys and may be used for approximate location purposes only.

8.2.6 The City Treasurer is not obliged to inquire into the value of land prior to conducting a sale. Further, there is no obligation to obtain fair market value for the land or to ensure that land being sold under tax sale may obtain fair market value at the time of the sale or in the future.

8.2. 7 Prior to submitting a tender, the onus is on the potential bidder to conduct his/her own inquiries into such matters as zoning, access, work orders, water/hydro and other arrears, building restriction, title problems and/or liens, which may survive the tax sale. The City makes no representations whatever as to the quality and/or quantity of the land being purchased.

8.2.8 Potential bidders are further advised that a lawyer should be retained in order to ensure that his/her interests are protected prior to the submission of a bid/tender.

8.2.9 The City does not conduct tours or provide access to properties being sold under tax sale. The City is not permitted to enter onto the lands being advertised without the owners' consent.

8.2.10 The City does not provide legal opinions to potential bidders in respect of issues, which may arise in the context of a public sale.

8.2.11 If two bids of equal amount are tendered, then the person who submitted the earlier bid will be deemed to be the higher bidder.

8.2.12 The successful tender is the highest bidder who has submitted a properly completed tender and who makes payment within fourteen calendar days of being notified by mail of the balance of the amount tendered, the appropriate land transfer tax, and accumulated taxes to the City.

8.2.13 Land Transfer Tax is an amount payable to the Minister of Finance by certified cheque, cash or money order.

8.2.14 If the highest bidder does not submit the remaining funds as described within fourteen calendar days from date of notification to remit the balance owing to the City, then the highest bidder's deposit is forfeited to the City and the land is offered in the same manner to the second highest bidder who then has fourteen calendar days from date of notification to remit the balance owing to the City. Failure by the second highest bidder to submit the remaining funds will also result in their deposit being forfeited to the City.

8.2.15 If there is no successful bidder, then within two years of the date of the public sale, the City may either:

- offer the lands for tax sale a second time, or
- vest in the City and the City may register a Notice of Vesting in favour of the City within two years from the date of the failed Tax Sale. If the City does not vest the land within those two years, the Tax Arrears Certificate will be deemed to be cancelled.

    8. 2.15.1 A Notice of Vesting, provides to the City title to the land in "fee simple" free from all estates ands interests of the Crown in right of Ontario, except:
    - Easements and restrictive covenants;
    - Estates and interest of the Crown in Right of Canada;
    - Adverse possession interests by abutting owners, if any.

8. 2.16 A Tax Deed, which is provided to the successful purchaser once the balance of the Cancellation Price is paid, provides to the purchaser title to the land in "fee simple" subject only to:

- Easements and restrictive covenants;
- Estates and interest of the Crown in Right of Canada or the Province of Ontario (e.g. Execution in favour of the Ministry of Finance);
- is vested in the Crown in right of Ontario because of an escheat or forfeiture as a result of the dissolution of a corporation, or belongs to the Crown in right of Ontario as a result of the death of an individual who did not have any lawful heirs; and
- Adverse possession interests by abutting owners, if any.

8.2.17 The City is not required to provide vacant possession of any properties, which may be occupied, and accordingly, should the purchaser require vacant possession, a court application, at his or her cost may be required in order to obtain a Writ of Possession. Further the City does not have a key to the property and is not in a position to provide one to the purchaser. This is the responsibility of the purchaser.

• Note: The City reserves the right to cancel any property from the tax sale up to the time of closing of the Tender, without any further notice or costs to the City.

8.2.18 Please ensure that the Tender Envelope and Tender Document are accurately and entirely completed including identifying the property that you are bidding on, your name and a phone number to reach you during business hours.

• Note: If you have submitted a bid and the property has been cancelled from the sale, or you are not the successful bidder, you can only receive your bid documents and deposit with appropriate identification after the tenders are opened and the bids for the tax sale properties finalized. After this time, you will be contacted about how your deposit and documents will be returned.

9. That By-Law Number 2017-21 is hereby repealed.

READ AND PASSED IN OPEN COUNCIL THIS 4TH DAY OF FEBRUARY 2019.

_____ _____

Guy Desjardins, Mayor **Monique Ouellet, Clerk**

Clarence-Rockland

RAPPORT N° FIN2018-050

Date	24/12/2018
Soumis par	Frédéric Desnoyers
Objet	Tax Administration Policy
# du dossier	F22 Tax Rolls and Records

1) **NATURE / OBJECTIF :**
Le but de ce rapport est de mettre à jour la politique d'administration et collection des taxes foncière.

2) **DIRECTIVE/POLITIQUE ANTÉCÉDENTE :**
Règlement 2017-21 : Tax administration Policy, adoptée le 6 février 2017

3) **RECOMMANDATION DU SERVICE:**
Que le Comité plénier recommande au Conseil d'adopter la politique sur l'administration des taxes foncières révisée, tel que recommandé au rapport FIN2018-050.

That the Committee of Whole recommends that Council adopts the revised Tax Administration Policy, as recommended in report no. FIN2018-050.

4) **HISTORIQUE :**
Le 30 mai 2017, le projet de loi 68 est entré en vigueur.
Plusieurs petits changements ont été faits concernant la vente de taxe (Tax Sale).

5) **DISCUSSION :**
Actuellement, 9 propriétés sont éligibles pour la vente de taxe. Ceux-ci seront mis en vente au début du printemps, ainsi le département s'est assuré de révisé le règlement d'administration sur les taxes foncières. Plusieurs petits changements ont été apportés, tous les changements sont identifiés en jaune dans le nouveau règlement et le texte enlevé est identifié dans l'ancien règlement.
Parmi les changements majeurs, on retrouve :

- Le terme « Bailiff » a été supprimé puisque ceci n'est pas utilisé dans le processus.
- Le trésorier peut maintenant accepter des ententes de paiements et extensions.

Le projet de loi 68 permet dorénavant de réduire le délai de vente de taxe de 3 ans à 2 ans. Le règlement mis à jour ne reflète pas ceci puisque le changement n'est pas recommandé. Le département renforce le règlement municipal depuis seulement 1 an et demi et les

délais sont très élevés. Ainsi, encore aucune propriété n'a été vendue pour la vente de taxe.
De plus, réduire le délai a un impact important sur les revenus d'intérêts tirés sur les propriétés en arrérages. Le département estime à 75 000 $ la perte additionnelle de revenu d'intérêt causé par la réduction de ce délai.

6) **CONSULTATION :**
La firme « Tax Team Inc. / Tri-Target Inc. » a été consulté afin de mettre à jour ce règlement. Cette firme est actuellement utilisée à titre d'expert dans les dossiers de vente de taxes.

7) **RECOMMANDATION OU COMMENTAIRES DU COMITÉ :**
N/A

8) **IMPACT FINANCIER (monétaire/matériaux/etc.):**
L'approbation de cette politique mise à jour n'a aucun impact financier.

9) **IMPLICATIONS LÉGALES :**
N/A

10) **GESTION DU RISQUE (RISK MANAGEMENT) :**
B/A

11) **IMPLICATIONS STRATÉGIQUES :**
N/A

12) **DOCUMENTS D'APPUI:**
2017-21 – Tax Administration Policy
2018-XX – Revised Tax Administration Policy

CORPORATION OF THE CITY OF CLARENCE-ROCKLAND

By-law 2017-21

BEING A BY-LAW TO ESTABLISH A POLICY FOR EFFECTIVE AND EFFICIENT BILLING AND COLLECTION OF PROPERTY TAXES FOR THE CORPORATION OF THE CITY OF CLARENCE-ROCKLAND.

WHEREAS Part XI of the Municipal Act, 2001, as amended sets out the process for the "Sale of Land for Tax Arrears";

NOW THEREFORE BE IT RESOLVED THAT THE COUNCIL OF THE CORPORATION OF THE CITY OF CLARENCE-ROCKLAND ENACT AS FOLLOWS:

1. GENERAL PROVISIONS

The purpose of this by-law is:

1.1 To ensure that municipal tax revenues are collected in a timely and effective manner.

1.2 To ensure that all taxpayers are treated fairly and equitably and to provide staff guidance for decision-making.

1.3 The scope of this document is intended to cover all aspects of the billing and collection of property tax levies and any amounts added as taxes for collection.

2. DEFINITIONS

2.1 "**Bailiff**" means a duly appointed agent under contract with the City to recover outstanding Property Taxes.

2.2 "**Cancellation Price**" means an amount equal to all the tax arrears owing at any time in respect of land together with all current real property taxes owing, interest, penalties thereon, and all reasonable costs incurred by the City after the treasurer becomes entitled to register a tax arrears certificate under section 371

2.3 "**City**" is the Corporation of the City of Clarence-Rockland.

2.4 **"Collection Costs"** means all costs incurred by the City to obtain information for collection purposes and/or collect Tax Arrears including, but not limited to, title search fees, corporate search fees, registered or certified mail, administrative charges, legal costs and tax sale scale of costs.

2.5 **"Extension Agreement"** means a contract between the City and the owner, spouse of the owner, a mortgagee or a tenant in occupation to extend the period of time in which the Cancellation Price is to be paid. The contract is entered into after the registration of a Tax Arrears Certificate and before the expiry of the one-year period following the registration date.

2.6 **"Late Payment Charges"** means penalties and interest applied by the City to unpaid Property Tax accounts, in accordance with section 345 of the Act and applicable City by-laws.

2.7 **"Municipal Tax Sale"** means the sale of land for Tax Arrears according to proceedings prescribed by the Act and Ontario Regulation 181/03.

2.8 "**Notice of Vesting**" means a notice of vesting as prescribed by section 379 of the Act conferring title to the City where there has been no successful tender of a parcel of land and the sale has not been cancelled by the City Treasurer.

2.9 **"Property Taxes"** means the total amount of taxes for municipal and school purposes levied on a property and includes other amounts added to the tax roll as may be permitted by applicable Provincial legislation, including but not limited to outstanding fines under the Provincial Offences Act.

2.10 "**Tax Deed**" is a tax deed as prescribed by Section 379 of the Act and includes the title conferred by the registration of the deed, that which is provided to the successful purchaser of the property after payment of the balance of the Purchase Price.

2.11 **"Tax Arrears"** means any portion of Property Taxes that remain unpaid after the date on which they are due.

2.12 **"Tax Arrears Certificate"** means a document that is registered on title, indicating the described property will be sold by public sale if all Property Taxes are not paid to the municipality within one year of the registration of the certificate.

3. ACCOUNTABILITY AND RESPONSIBILITY

3.1 **The Director, Finance and Economic Development is responsible to:**
Ensure that outstanding Property Tax collection processes are performed in accordance with this policy and all applicable legislation.

3.2 **The Tax Analyst / Collector, is responsible to:**
- 3.2.1 Ensure this policy remains consistent with current legislation
- 3.2.2 Ensure applicable staff are aware of and trained on this policy
- 3.2.3 Communicate any policy revisions to applicable staff, and
- 3.2.4 Assess overdue property tax accounts to ensure tax collection processes are performed in accordance with this policy

4. PROCEDURES

Section 5: Tax Billings
Section 6: Penalty/ Interest (Late Payment/ Overdue Charges)
Section 7: Tax Arrears – Collection Process
Section 8: Property Tax Sales Process

5. TAX BILLINGS

5.1 **Interim**: The City will bill for Interim Taxes in February of each year. Billings will be calculated, printed and mailed in accordance

with Provincial Legislation. The first due date must be at least twenty-one (21) days after the date of mailing of the tax bill.

5.1.1 **Regular tax accounts** – payment will be due in two (2) instalments[1], unless unusual or unforeseen administrative, technical or legislative issues result in delay of the interim billing process

5.1.2 **PTP** Tax Accounts - payment will be due in either a maximum of six (6) payments in the months of January through June or on the same date as the Regular Tax Accounts, depending on which PTP option the taxpayer has selected.

5.2 **Final**: The City will issue Final Tax bills subsequent to approved budgets, requisitions and/or rates of all entities for which the City is required to levy and collect. The first due date must be at least twenty-one (21) days after the date of mailing of the tax bill

5.2.1 **Regular tax accounts** –Residential- payment will be due in two (2) instalments and also Commercial- payment will be due in two (2) instalments , unless unusual or unforeseen administrative, technical or legislative issues result in delay of the interim billing process

5.2.2 **PTP** Tax Accounts - payment will be due in either a maximum of six (6) payments in the months of July through December or on the same date as the Regular Tax Accounts, depending on which PTP option the taxpayer has selected.

5.3 **SUPPLEMENTARY TAX BILLINGS**: The Municipal Property Assessment Corporation (MPAC) regularly provides additional assessment data on properties necessitating a supplementary billing. The City will bill for these additional (supplementary) assessments as soon as practical after receipt of the data from MPAC. A maximum of three (2) instalments may be allowed for supplementary billings where the tax account is not on PTP.

[1] Actual due dates will be established by Council through City By-law.

Where the account is on PTP a maximum of six (6) instalments may be allowed. Whether the account is Non-PTP or PTP there will be no difference with regard to the total time allowed to complete payment of the full tax amounts. Due dates will be established, so as not to overlap with any previous billing due date(s), where practical. The first due date must be at least twenty-one (21) days after the date of mailing of the supplementary tax bill.

6. PENALTY/ INTEREST (Late Payment/ Overdue Charges)

6.1 All Tax Arrears are subject to Late Payment Charges. A penalty at a rate established by by-law is added to the unpaid amount of a tax instalment on the first day after the instalment due date. In addition, as long as the Property Taxes remain unpaid, interest at a rate established by by-law is added on the first day of each month thereafter. Penalty and interest charges cannot be waived. All Collection Costs incurred by the City to obtain information for collection purposes and/or collect Tax Arrears are payable by the property owner and are added to the tax account, with the exception of Bailiff fees, which are charged and collected by the Bailiff directly.

7. TAX ARREARS – COLLECTION PROCESS – ONGOING STEPS

7.1 Property taxes are a secured special lien on land in priority to any other claim, except a claim by the Crown. Taxes may be recovered with costs as a debt due to the City from the original owner and/or any subsequent owner of the property.

7.2 Property tax payments are applied as follows:

7.2.1 The payment is first applied against any Late Payment Charges according to the length of time the charges have been outstanding, with the charges that have been outstanding the longest being discharged first

7.2.2 The payment is then applied in the same manner against the Property Taxes owing, with the Property Taxes that have been outstanding the longest being discharged first

7.3 The City will primarily use the following methods to collect Tax Arrears:

7.3.1 **Verbal communication**

7.3.2 **Overdue notices -** A minimum of one Overdue Notice will be issued each year following the last Final Billing instalment. Overdue Notices will be sent to all taxpayers with an overdue amount greater than ten ($10.00) dollars

7.3.3 **Payment arrangements** - Staff may enter into payment arrangements at any time prior to the registration of a Tax Arrears Certificate. Payment arrangements must include all Tax Arrears, current taxes, accruing estimates of future taxes and Late Payment Charges and be sufficient to ensure payment in full is realized within a reasonable period of time. Late Payment Charges will continue to accrue during all such payment arrangements until full payment on the account has been made. Postdated cheques or Preauthorized Payment Plan are the preferred methods of payment.

8. MUNICIPAL TAX SALES PROCESS

8.1 Municipal Tax Sale Notices

8.1.1 **Final Notice-Prior to Tax Sale** - In the fourth quarter of each year, Final Notices-Prior to Tax Sale are mailed to those residential property owners approaching three years of Property Taxes in arrears. The Final Notice-Prior to Tax Sale advises that they have thirty (30) days to pay the taxes or enter into a firm, suitable payment arrangement with the City.

8.1.2 **Notice to Interested Parties** - If a residential property owner fails to respond to the Final Notice-Prior to Tax Sale, a property title search is carried out by the City in order to identify all parties with a financial interest in the property. The identified parties are then notified of the Tax Arrears. The Notice to Interested Parties advises that the City intends to proceed with a Municipal Tax Sale and provides interested parties with an opportunity to pay the arrears in order to protect their interest in the property.

8.1.3 **Final Notice-Prior to Tax Arrears Certificate Registration** - If neither the property owner nor interested parties respond to the previous notices, a Final Notice-Prior to Tax Arrears Certificate Registration is issued as one last notification to the property owner of their outstanding balance prior to proceeding with a Municipal Tax Sale.

The Final Notice-Prior to Tax Arrears Certificate Registration advises the property owner that they have 30 days to pay their taxes or enter into a firm, suitable arrangement with the City. Otherwise, the City will register a Tax Arrears Certificate against their property.

8.1.4 **Tax Arrears Certificate Registration** - Municipal Tax Sale proceedings can begin once taxes have been in arrears for at least three years. Once all other collection efforts are exhausted and the City has been unable to secure payment of the Tax Arrears or a firm, suitable repayment plan, the City commences Municipal Tax Sale proceedings by registering a Tax Arrears Certificate against the property.

The City sends a Notice of Registration of Tax Arrears Certificate to the property owner and all interested parties. If full payment is not received within 280 days of registration of the Tax Arrears Certificate, the City issues a Final Notice to the property owner and all interested parties within 30 days after the expiry of the 280-day period. The notice specifies the date on which the property will be advertised for public sale if the Tax Arrears are not paid or unless Council has approved an Extension Agreement.

If the City does not receive a response, the account will be sent to the Bailiff to perform a site visit and advise the property owner, mortgage company, lawyer or interested parties of the pending sale of the property and attempt collection. Once a Tax Arrears Policy Certificate has been registered, only full payment of the Cancellation Price will be accepted unless Council has approved an Extension Agreement.

Full payment will be accepted up to the date of transfer of the property following a sale. In the event of non-payment, the City will proceed with a Municipal Tax Sale.

8.2 Municipal Tax Sale Tender Process

8.2.1 A Tax Sale of any property is subject to cancellation up to the time of the tender opening without any further notice.

8.2.2 The minimum bid is the Cancellation Price.

8.2.3 A separate tender must be provided for each property bid on and must be in the form provided (Form 7 Tender of Purchase). No substitutes can be accepted. There is a fee for each tender package requested.

8.2.4 The tender must be accompanied by a deposit of at least 20% of the tender/bid amount (NOT the Cancellation Price amount) by way of money order, bank draft, or certified cheque payable to the CITY OF CLARENCE-ROCKLAND.

8.2.5 The City is not obliged to provide a survey or reference plan for any parcel of land being sold under tax sale. The Assessment Maps, provided as a courtesy, hereto are not surveys and may be used for approximate location purposes only.

8.2.6 The City Treasurer is not obliged to inquire into the value of land prior to conducting a sale. Further, there is no obligation to obtain fair market value for the land or to ensure that land being sold under tax sale may obtain fair market value at the time of the sale or in the future.

8.2.7 Prior to submitting a tender, the onus is on the potential bidder to conduct his/her own inquiries into such matters as zoning, access, work orders, water/hydro and other arrears, building restriction, title problems and/or liens, which may survive the tax sale. The City makes no representations whatever as to the quality and/or quantity of the land being purchased.

8.2.8 Potential bidders are further advised that a lawyer should be retained in order to ensure that his/her interests are protected prior to the submission of a bid/tender.

8.2.9 The City does not conduct tours or provide access to properties being sold under tax sale.

8.2.10 The City does not provide legal opinions to potential bidders in respect of issues, which may arise in the context of a public sale.

8.2.11 If two bids of equal amount are tendered, then the person who submitted the earlier bid will be deemed to be the higher bidder.

8.2.12 The successful tender is the highest bidder who has submitted a properly completed tender and who makes payment within fourteen calendar days of being notified by mail of the balance of the amount tendered, the appropriate land transfer tax, and accumulated taxes to the City.

8.2.13 Land Transfer Tax is an amount payable to the Minister of Finance by certified cheque, cash or money order,

8.2.14 If the highest bidder does not submit the remaining funds as described, then the highest bidder's deposit is forfeited and the land is offered in the same manner to the second highest bidder who then has fourteen calendar days from date of notification to remit the monies owing to the City. Failure by the second highest bidder to submit the remaining funds will also result in their deposit being forfeited to the City.

8.2.15 If there is no successful bidder, then the lands may vest in the City and the City may register a Notice of Vesting in favour of the City within one year from the date of the failed Tax Sale.

8.2.16 A Tax Deed, which is provided to the successful purchaser at the time when the balance of the Cancellation Price is paid, provides to the purchaser title to the land in "fee simple" subject only to:

- Easements and restrictive covenants; and
- Estates and interest of the Crown in Right of Canada or the Province of Ontario
  (e.g. Execution in favour of the Ministry of Finance); and
- Adverse possession interests by abutting owners, if any.

8.2.17 The City is not required to provide vacant possession of any properties, which may be occupied, and accordingly, should the purchaser require vacant possession, a court application, at his or her cost may be required in order to obtain a Writ of Possession. Further the City does not have a key to the property and is not in a position to provide one to the purchaser. This is the responsibility of the purchaser.

- Note: The City reserves the right to cancel any property from the tax sale up to the time of closing of the Tender, without any further notice or costs to the City.

8.2.18 Please ensure that the Tender Envelope and Tender Document are accurately and entirely completed including identifying the property that you are bidding on, your name and a phone number to reach you during business hours.

- Note: If you have submitted a bid and the property has been cancelled from the sale, or you are not the successful bidder, you can only receive your bid documents and deposit with appropriate identification after the tenders are opened and the bids for the tax sale properties finalized. After this time you will be contacted about how your deposit and documents will be returned.

Read a first, second and third time and passed this 6th day February 2017.

Guy Desjardins, Mayor

Monique Ouellet, Clerk

CORPORATION OF THE CITY OF CLARENCE-ROCKLAND
BY-LAW NO. 2019-11

BEING A BY-LAW TO AUTHORIZE THE CORPORATION OF THE CITY OF CLARENCE-ROCKLAND TO SIGN AN AGREEMENT WITH THE MINISTRY OF TRANSPORTATION WITH REGARDS TO THE ALLOCATION OF THE PROVINCIAL GAS TAX TO MUNICIPALITIES FOR THE PUBLIC TRANSIT SERVICES.

WHEREAS the Corporation of the City of Clarence-Rockland intends to sign an agreement with the Ministry of Transportation for the allocation to the municipality of a portion of the provincial gas tax;

WHEREAS Sections 8, 9 and 11 of the Municipal Act, 2001, S.O. 2001, Chapter 25 and amendments thereto provides that every municipal Corporation may pass by-laws for the purpose of governing its affairs as it considers appropriate;

NOW THEREFORE, the Council of the Corporatoin of the City of Clarence-Rockland enacts as follows:

1. **THAT** the City of Clarence-Rockland authorize the Mayor and the Treasurer to execute the Letter of agreement in respect of dedicate gas tax funds with the Ministry of Transportation for the province of Ontario; and
2. **THAT** the agreement be in the form hereto annexed and marked as Schedule "A" to this by-law; and
3. **THAT** this by-law shall come into force on the day of its adoption and shall remain in force until it is repealed.

READ, PASSED AND ADOPTED BY COUNCIL THIS 4th DAY OF FEBRUARY 2019.

_____ _____

GUY DESJARDINS, MAYOR MONIQUE OUELLET, CLERK

Ministry of Transportation

Office of the Minister

Ferguson Block, 3rd Floor
77 Wellesley St. West
Toronto ON M7A 1Z8
416 327-9200
www.ontario.ca/transportation

Ministère des Transports

Bureau du ministre

Édifice Ferguson, 3e étage
77, rue Wellesley Ouest
Toronto ON M7A 1Z8
416 327-9200
www.ontario.ca/transports

JAN 2 2 2019

Mayor Guy Desjardins
City of Clarence-Rockland
1560 Laurier Street
Rockland ON K4K 1P7

Dear Mayor Desjardins:

RE: Dedicated Gas Tax Funds for Public Transportation Program

---

This Letter of Agreement between the **City of Clarence-Rockland** (the "Municipality") and Her Majesty the Queen in right of the Province of Ontario, as represented by the Minister of Transportation for the Province of Ontario, (the "Ministry"), sets out the terms and conditions for the provision and use of dedicated gas tax funds under the Dedicated Gas Tax Funds for Public Transportation Program (the "Program"). Under the Program, the Province of Ontario provides two cents out of the provincial gas tax to municipalities to improve Ontario's transportation network and support economic development in communities for public transportation expenditures.

The Ministry intends to provide dedicated gas tax funds to the Municipality in accordance with the terms and conditions set out in this Letter of Agreement and the enclosed Dedicated Gas Tax Funds for Public Transportation Program 2018/19 Guidelines and Requirements (the "guidelines and requirements").

In consideration of the mutual covenants and agreements contained in this Letter of Agreement and the guidelines and requirements, which the Municipality has reviewed and understands and are hereby incorporated by reference, and other good and valuable consideration, the receipt and sufficiency of which are expressly acknowledged, the Ministry and the Municipality agree as follows:

29. To support local public transportation services in the Municipality, the Ministry agrees to provide funding to the Municipality under the Program to a maximum amount of up to **$245,147** ("the "Maximum Funds") in accordance with, and subject to, the terms set out in this Letter of Agreement and, for greater clarity, the guidelines and requirements.

.../2

30. Subject to Section 1, the Ministry will, upon receipt of a fully signed copy of this Letter of Agreement and a certified copy of the authorizing municipal by-law(s) and, if applicable, resolution(s) for the Municipality to enter into this Letter of Agreement, provide the Municipality with **$183,860**; and any remaining payment(s) will be provided thereafter.

3. If another municipality authorizes the Municipality to provide local public transportation services on its behalf and authorizes the Municipality to request and receive dedicated gas tax funds for those services also on its behalf, the Municipality will in the by-law(s) and, if applicable, resolution(s) described in section 2 confirm that the Municipality has the authority to provide those services and request and receive those funds.

4. The Municipality agrees that any amount payable under this Letter of Agreement may be subject, at the Ministry's sole discretion, to any other adjustments as set out in the guidelines and requirements.

5. The Municipality will deposit the funds received under this Letter of Agreement in a dedicated gas tax funds reserve account, and use such funds and any related interest only in accordance with the guidelines and requirements.

6. The Municipality will adhere to the reporting and accountability measures set out in the guidelines and requirements, and will provide all requested documents to the Ministry.

7. The Municipality agrees that the funding provided to the Municipality pursuant to this Letter of Agreement represents the full extent of the financial contribution from the Ministry and the Province of Ontario under the Program for the 2018/19 Program year.

8. The Ministry may terminate this Letter of Agreement at any time, without liability, penalty or costs upon giving at least thirty (30) days written notice to the Municipality. If the Ministry terminates this Letter of Agreement, the Ministry may take one or more of the following actions: (a) cancel all further payments of dedicated gas tax funds; (b) demand the payment of any dedicated gas tax funds remaining in the possession or under the control of the Municipality; and (c) determine the reasonable costs for the Municipality to terminate any binding agreement(s) for the acquisition of eligible public transportation services acquired, or to be acquired, with dedicated gas tax funds provided under this Letter of Agreement, and do either or both of the following: (i) permit the Municipality to offset such costs against the amount the Municipality owes pursuant to paragraph 8(b); and (ii) subject to section 1, provide the Municipality with funding to cover, in whole or in part, such costs. The funding may be provided only if there is an appropriation for this purpose, and in no event will the funding result in the Maximum Funding exceeding the amount specified under Section 1.

9. Any provisions which by their nature are intended to survive the termination or expiration of this Letter of Agreement including, without limitation, those related to disposition, accountability, records, audit, inspection, reporting, communication, liability, indemnity, and rights and remedies will survive its termination or expiration.

10. This Letter of Agreement may only be amended by a written agreement duly executed by the Ministry and the Municipality.

11. The Municipality agrees that it will not assign any of its rights or obligations, or both, under this Letter of Agreement.

12. The invalidity or unenforceability of any provision of this Letter of Agreement will not affect the validity or enforceability of any other provision of this Letter of Agreement. Any invalid or unenforceable provision will be deemed to be severed.

13. The term of this Letter of Agreement will commence on the date of the last signature of this Letter of Agreement.

14. The Municipality hereby consents to the execution by the Ministry of this Letter of Agreement by means of an electronic signature.

If the Municipality is satisfied with and accepts the terms and conditions of this Letter of Agreement, please print it, secure the required signatures for it, and then return a fully signed copy, in pdf format, to the following email account:

MTO-PGT@ontario.ca

Sincerely,

Jeff Yurek
Minister of Transportation

I have read and understand the terms of this Letter of Agreement, as set out above, and, by signing below, I am signifying the Municipality's consent to be bound by these terms.

Municipality

Per: _____ Date: _____
Mayor

Per: _____ Date: _____
Chief Financial Officer/Treasurer

THE CORPORATION OF THE CITY OF CLARENCE-ROCKLAND

BY-LAW NUMBER 2019-12

BEING A BY-LAW TO ESTABLISH YEARLY RATES FOR THE COLLECTION AND DISPOSAL OF GARBAGE AND RECYCLING AND ALL RELATED WASTE MANAGEMENT ACTIVITIES.

WHEREAS Section 391 of the Municipal Act R.S.O., 2001 as amended provides that a by-law may be passed by the Council of local municipalities for the collection, removal, and disposal by the Corporation of garbage and/or other refuse, throughout the whole municipality or in defined areas at the expense of the owners and occupants of the land therein;

AND WHEREAS Subsection 1 of Section 398 of the Municipal Act R.S.O., 2001 as amended states that fees and charges imposed by a municipality on a person constitutes a debt of the person to the municipality;

AND WHEREAS Subsection 2 of Section 398 of the Municipal Act R.S.O., 2001 as amended states that the Treasurer of a local municipality may add fees and charges imposed by a municipality to the tax roll for the property to which the public utility was supplied and collect them in the same manner as municipal taxes;

AND WHEREAS Council of the Corporation of the City of Clarence-Rockland recognizes and has complied with the notice provisions as set out in By-Law 2011-105;

NOW THEREFORE the Council of the Corporation of the City of Clarence-Rockland enacts as follows:

1. Definitions;

"Equivalent residential unit"	An equivalent residential unit is a place of residence; in the case of an apartment and/or a semi-detached, each place of residence shall be deemed to be an equivalent unit.
"Equivalent commercial unit"	An equivalent commercial unit is a property with a place of business assessed with a commercial evaluation; only one (1) equivalent commercial unit can be charged per property.
"Home Occupation"	Means any occupation conducted for gain or profit as an accessory use within a residential unit.

"Garbage" means local household generated waste material and includes the following categories:

Type I Garbage
(Household Waste)

Includes any article, thing, matter or effluent belonging to or associated with a residence, household or dwelling unit and includes but is not limited to the following: kitchen and table waste of animal origin resulting from the preparation or consumption of food; clothing; ashes; paper (except recyclable paper); broken crockery; and other such articles which would normally pertain to a dwelling.

Type II Garbage
(Recyclable waste)

Includes all materials collected by the Municipality for recycling and without limiting the generality of the forgoing includes: beverage and food containers, cardboard, recyclable paper.

"Supplementary Assessment Roll" The list of properties, issued by the Municipal Property Assessment Corporation as per Section 34 (1) of the Assessment Act, R.S.O. 1990, c.A.31, as amended, to which an increase in value occurs which results from the erection, alteration, enlargement or improvement of any building, structure, machinery, equipment or fixture or any portion thereof that commences to be used for any purpose

2. The following rates shall be paid as follows:
   a) a fixed rate of $187.50 per equivalent residential unit
   b) a fixed rate of $400.00 per equivalent commercial unit.
   c) or $135.00 / ton with a minimum of $2,000.00 for commercial clients that use bins

3. A residential unit with a home occupation will be charged the fixed rate of one equivalent commercial unit, and will be allowed to the service equivalent to one commercial unit.

4. All new residential unit and commercial unit shall be levied and imposed a monthly rate from the date of occupancy specified in the supplementary assessment roll to the end of the current calendar year. The monthly rate shall be determined by using as its numerator the special rate as determined in

Section 2 and using as its denominator 12 and consequently multiplying the results by the number of months of occupancy.

5. The fixed rate will be charged to all residential units and commercial units on the final tax bill and this fee will be for the service provided in the current year starting January 1st to December 31st and of each consecutive year until repealed.

6. All past due accounts will be subject to the penalty and interest charges as set out in the current by-law which provides for the adoption of tax rates and to further provide for penalty and interest in default of payment thereof.

7. If any section or portion of this By-law is found by a court of competent jurisdiction to be invalid, it is the intent of Council of the Corporation of the City of Clarence-Rockland that all remaining sections and portions of this By-Law continue in force and effect.

8. This By-Law shall be deemed to have come into force and take effect on the 1st day of January 2019.

9. That By-Law Number 2018-02 is hereby repealed.

READ AND PASSED IN OPEN COUNCIL THIS 4th DAY OF February 2019.

_____ _____

Guy Desjardins, Mayor Monique Ouellet, Clerk

Clarence-Rockland

RAPPORT N° FIN2019-006

Date	24/01/2019
Soumis par	Frédéric Desnoyers
Objet	Adoption des taux de déchets 2019
# du dossier	F21 Revenues

1) **NATURE / OBJECTIF :**
Le but de ce rapport est de finaliser les taux de déchets résidentiel et commercial suivant l'approbation du budget 2019.

2) **DIRECTIVE/POLITIQUE ANTÉCÉDENTE :**
Le règlement 2018-02 est présentement utilisé afin d'établir les taux pour la collection des déchets et recyclage.

3) **RECOMMANDATION DU SERVICE:**
THAT the Committee of the Whole recommends that Council adopts a by-law to establish new fees for the collection and disposal of garbage and recycling, commencing in 2019

QUE le Comité plénier recommande que le Conseil adopte un règlement pour établir les nouveaux frais de collection et disposition des déchets et recyclage, commençant en 2019.

4) **HISTORIQUE :**
Les taux de déchets ont été discutés au cours du processus budgétaire 2019, plus particulièrement à la rencontre budgétaire plénière du 17 janvier 2019.

5) **DISCUSSION :**
Il est recommandé que les taux résidentiels demeurent constants, soit à 187.50 $ par unité.
Le taux demeure constant pour les utilisateurs commerciaux à sacs, soit à 400 $ par unité.
Pour les utilisateurs commerciaux avec un conteneur le taux proposé est de 135$/tonne avec un taux minimal de $2,000 par année.

6) **CONSULTATION :**
N/A

7) **RECOMMANDATION OU COMMENTAIRES DU COMITÉ :**
N/A

8) **IMPACT FINANCIER (monétaire/matériaux/etc.):**
L'augmentation des taux était déjà incluse dans le budget 2019 et il n'y a donc pas d'impact supplémentaire.

9) **IMPLICATIONS LÉGALES :**
N/A

10) **GESTION DU RISQUE (RISK MANAGEMENT) :**
N/A

11) **IMPLICATIONS STRATÉGIQUES :**
N/A

12) **DOCUMENTS D'APPUI:**
By-Law 2019-XX - Waste Management Rates for 2019

THE CORPORATION OF THE CITY OF CLARENCE-ROCKLAND

BY-LAW NUMBER 2019-13

BEING A BY-LAW TO AMEND BY-LAW NUMBER 2016-15 BEING A BY-LAW TO PROVIDE WATER AND SEWER FEES AND CHARGES AND TO REGULATE THE USE OF SUCH UTILITIES.

WHEREAS section 391 of the *Municipal Act, 2001 S.O. 2001, c, 25*, provides that a municipality and local board may pass bylaws imposing fees and charges on persons for services or activities provided or done by or on behalf of it, for costs payable by it for services or activities provided or done by or on behalf of any other municipality or local board, for the use of its property including property under its control, and for capital costs payable by it for sewage and water services or activities which will be provided or done by or on behalf of it after the fees and charges are imposed;

AND WHEREAS section 81 of *the Municipal Act, 2001 S.O. 2001, c, 25*, provides that a municipality may shut off the supply of a public utility by the municipality to land if fees or charges associated therewith are overdue;

AND WHEREAS the Council of the Corporation of the City of Clarence-Rockland did approve recommendations in the Water and Sewer Rate Study prepared by Hemson Consulting Ltd. for the City's Water and Sewer Systems which gives consideration to the *Sustainable Water and Sewage Systems Act, 2002* (repealed December 2012), the *Water Opportunities Act*, 2010 as well as the *Safe Drinking Water Act, 2002* as amended and associated *Ontario Regulation 453/07.*

NOW THEREFORE the Council of the Corporation of the City of Clarence-Rockland enacts as follows:

1. **THAT** Schedule "A" of By-Law 2016-15 be repealed and replaced by Schedule "A" hereto attached; and

2. **THAT** By-Law 2017-159 is hereby repealed.

READ, DONE AND PASSED IN OPEN COUNCIL THIS 4th DAY OF FEBRUARY 2019.

Guy Desjardins, Mayor **Monique Ouellet, Clerk**

SCHEDULE "A" TO BY-LAW No. 2016-15
as amended by By-law No. 2019-13

1. WATER AND SEWER CHARGES

i) Owners of metered properties that are serviced by the public utilities system shall be invoiced for water and sewer charges as follows:

a) Flat annual charge for:

Water service	$159.84 per unit
Sewer service	$159.00 per unit

PLUS

b) Consumption charge

Water per cubic meter $1.3067

Sewer per cubic meter $1.7207

ii) Owners of non-metered properties that are serviced by the public utilities system shall be invoiced for water and sewer charges as follows:

a) Flat annual charge for:

Water service	$159.84 per unit
Sewer service	$159.00 per unit

PLUS

b) Flat consumption charge of $59.45 per month

iii) Villages (excluding vacant lands) who have frontage on the water distribution system and are not serviced by the water distribution system shall be invoiced for water charges as follows:

a) Flat annual charge for:

Water service	$153.72 per unit

2. SEWER CHARGES

Sewer charges for properties in the former Township of Clarence who are on the private/public septic system shall be imposed a flat service charge as stated below:

1856 Labonté	$693 / year
1860 Labonté	$790 / year
1862 Labonté	$596 / year

3. CAPITAL CONNECTION CHARGES

A capital connection charge will be levied to all existing users that wish to connect to the municipal water and sewer system. The fixed charge to connect to each service is as follows:

Water service	$3,354 per connection
Sewer service	$3,020 per connection

4. OTHER CHARGES

a. Opening of water accounts is subject to a non-refundable administrative fee of $45.00.

b. A $60.00 administrative fee, per visit, to inspect and seal the water meter and to open the water service.

c. Service representative calls to collect overdue accounts / delivery of "Door hanger" last notice to collect overdue accounts, following notice to shut off water supply, will result in a $45.00 charge per account.

d. A $60.00 per service charge will be imposed for the inspection of a service and/or to turn on/off the supply of water on account of By-law violation or non-payment of water bill, and to reinstate supply following the turning off of the supply for By-law violation or non-payment.

e. A $60.00 per service charge will be imposed when the Public Services external clerk, at the request of the owners or occupants, is required to turn on/off the supply of water to a property between 8:00 AM and 4:30 PM, Mondays through Fridays (except statutory holidays). Otherwise the service charge to be imposed will be the actual cost to the municipality for a call out plus 10% administrative fee with a minimum charge of $110.00.

f. The cost of supply and installation of water meters, thawing of services or other services will be as determined by the Director of Infrastructure and Engineering plus an administrative charge.

g. A $45.00 administrative fee will be imposed for a final meter read.

h. Water Meter leak detection: work order requested by (owner or occupant) $50.00

Clarence-Rockland

REPORT N° FIN2019-003

Date	24/01/2019
Submitted by	Frédéric Desnoyers
Subject	Water and Sewer fees
File N°	F28 Water and Sewer

1) **NATURE/GOAL :**
To propose an amendment to increase water and sewer fees by 3 percent as was propose in the 2019 Budget Adoption Report number FIN2019-002

2) **DIRECTIVE/PREVIOUS POLICY :**
By-law 2016-15 & By law 2016-159 are the current policies in place to provide water and sewer fees and charges and to regulate the use of such utilities.

3) **DEPARTMENT'S RECOMMENDATION :**
BE IT RESOLVED THAT Council adopts By-law No. 2019-XX, being a by-law to establish new fees for Water and Sewer, commencing in 2019.

QU'IL SOIT RÉSOLU QUE le conseil adopte le Règlement No. 2019-XX, étant un règlement pour établir des nouveaux frais d'eau et d'égouts, commençant en 2019.

4) **BACKGROUND :**
The rate increases being recommended for 2019 are supported by a detail report done in 2018 by Hemson Consulting.

5) **DISCUSSION :**

An increase of 4% on fixed fee charges and 2% on consumption charges is recommended per Hemson's report to support the operational budget for both water and sewer fees.

An inflation of 2% is also recommended on the capital connection charges, the fee was revised by Hemson in 2017. The proposed fee is $3,354 for water and $3,020 for sewer new connections.

No increase is proposed in "Other Charges" for water and sewer since the fees are comparable to other neighboring municipalities.

6) **CONSULTATION:**
N/A

7) **RECOMMENDATIONS OR COMMENTS FROM COMMITTEE/ OTHER DEPARTMENTS :**
N/A

8) **FINANCIAL IMPACT (expenses/material/etc.):**

The increases in rates were part of the 2019 budget and therefore there is no additional impact.

9) **LEGAL IMPLICATIONS :**
N/A

10) **RISK MANAGEMENT :**
N/A

11) **STRATEGIC IMPLICATIONS :**
N/A

12) **SUPPORTING DOCUMENTS:**
Proposed by-law number 2019-XX

CORPORATION OF THE CITY OF CLARENCE-ROCKLAND

BY-LAW NO. 2019-14

BEING A BY-LAW TO AUTHORIZE THE CORPORATION OF THE CITY OF CLARENCE-ROCKLAND TO SIGN AN AGREEMENT WITH EMPLOYEMENT AND SOCIAL DEVELOPMENT CANADA FOR THE ENABLING ACCESSIBILITY FUND

WHEREAS Sections 8, 9, and 11 of the Municipal Act, 2001, S.O. 2001, Chapter 25 and amendments thereto provides that every municipal Corporation may pass by-laws for the purpose of governing its affairs as it considers appropriate; and

WHEREAS the Council of the Corporation of the City of Clarence-Rockland deems it expedient to sign an agreement with Employement and Social Development Canada for the Enabling Accessibility Fund;

NOW THEREFORE, the Council of the Corporation of the City of Clarence-Rockland enacts as follows:

1. **THAT** Municipal council authorizes the Mayor and the Clerk to sign an agreement with Employement and Social Development Canada for the Enabling Accessibility Fund;

2. **THAT** the agreement be in the form hereto annexed and marked as Schedule "A" to this by-law;

3. **THAT** this by-law shall come into force on the day of its adoption.

READ, PASSED AND ADOPTED BY COUNCIL THIS 4TH DAY OF FEBRUARY, 2019.

GUY DESJARDINS, MAYOR

MONIQUE OUELLET, CLERK

Emploi et Développement social Canada

Employment and Social Development Canada

Numéro du Projet: 1591297

Modalités de l'Entente

ENTRE

Sa Majesté la Reine du chef du Canada

(ci-après « le Canada »), représentée par

le ministre de l'Emploi et du Développement social

ET

Corporation de la Cité de Clarence-Rockland

(ci-après « le bénéficiaire »)

Ci-après appelés collectivement « les parties »

Attendu que le bénéficiaire a demandé au Canada une aide financière pour la réalisation de son projet ;

Attendu que le Canada a déterminé que le bénéficiaire est admissible à une subvention dans le cadre du programme mentionné à l'Annexe A - Description du projet et signatures et que le projet répond par ailleurs aux critères d'admissibilité à un tel appui; et

Attendu que le Canada a convenu de verser une subvention au bénéficiaire pour aider celui-ci à réaliser le projet;;

En conséquence, les parties conviennent de ce qui suit :

1.0 ENTENTE

1.1 Les documents énumérés ci-dessous et toute modification qui pourrait y être apportée constituent l'intégralité de l'entente entre les parties relativement à son objet et, en cas de divergence, remplacent tout autre arrangement, entente, négociation et document accessoire, oral ou autre, entre le bénéficiaire et le Canada relativement à son objet :

(a) Les présentes Modalités de l'entente de subvention;

(b) Annexe A - Description du projet et signatures.

2.0 INTERPRÉTATION

2.1 À moins que le contexte n'indique un sens différent, les expressions énumérées ci-dessous ont les significations suivantes aux fins de cette entente :

« Dépenses admissibles » s'entend des dépenses qui sont énumérées dans le budget du projet identifié à l'Annexe A - Description du projet et signatures;

« Exercice financier » s'entend de la période commençant le 1er avril d'une année civile et se terminant le 31 mars de l'année civile suivante;

« Jours ouvrables » signifie du lundi au vendredi, à l'exception des jours fériés;

« Période de réalisation du projet » s'entend de la période commençant à la date de début du projet et se terminant à la date de fin du projet indiquée à l'Annexe A - Description du projet et signatures;

« Projet » s'entend du projet décrit à l'Annexe A - Description du projet et signatures; et,

« Subvention » s'entend des fonds octroyés par le Canada dans le cadre de cette entente.

3.0 DATE D'ENTRÉE EN VIGUEUR ET DURÉE

3.1 Cette entente entrera en vigueur à la date où elle sera signée par les parties et, sous réserve de l'article 3.2, expirera à la fin de la période de réalisation du projet réalisé à moins qu'elle ne soit résiliée à une date antérieure conformément aux termes de l'entente.

3.2 Malgré l'article 3.1, les droits et obligations des parties qui, de par leur nature, dépassent l'expiration ou la résiliation de cette entente survivront à ladite expiration ou résiliation.

4.0 OBJET DE LA SUBVENTION

4.1 L'objet du financement accordé par le Canada aux termes de cette entente est d'appuyer la réalisation du projet par le bénéficiaire, celui-ci devant utiliser le financement à seule fin de payer les dépenses admissibles.

5.0 PAIEMENT DE LA SUBVENTION

5.1 Le Canada versera au bénéficiaire une subvention d'un montant précisé à l'Annexe A - Description du projet et signatures. La subvention sera remise au bénéficiaire en versements conformément au mode de paiement énoncé à l'Annexe A - Description du projet et signatures.

6.0 AFFECTATION

6.1 Tout paiement versé dans le cadre de cette entente est subordonné à l'affectation des fonds par le Parlement pour l'exercice financier durant lequel le paiement doit être versé.

7.0 RÉDUCTION OU RÉSILIATION DU FINANCEMENT

7.1 Le Canada peut, sur préavis d'un minimum de quatre-vingt-dix (90) jours, réduire le financement prévu aux termes de cette entente ou résilier l'entente conformément à l'article 15.0 si :

(a) le niveau de financement pour le programme désigné dans cette entente, pour tout exercice financier durant lequel un paiement doit être versé dans le cadre de cette entente, est réduit par suite d'une décision du gouvernement du Canada relative aux dépenses, ou

(b) le Parlement réduit l'affectation des fonds à des subventions pour le programme désigné dans cette entente.

7.2 Si le bénéficiaire juge que la réduction du financement, suivant un préavis du Canada donnée en vertu de l'article 7.1 l'empêchera de réaliser le projet à sa convenance, le bénéficiaire peut résilier l'entente après avoir émis un préavis d'au moins 30 jours au Canada.

8.0 DÉCLARATIONS DU BÉNÉFICIAIRE

8.1 Le bénéficiaire

(a) déclare qu'il a fourni au Canada une liste véridique et exacte de tout montant dû au gouvernement du Canada en vertu des lois ou d'ententes de financement et qui était en souffrance et arriéré au moment de la demande de financement du bénéficiaire dans le cadre du programme nommé dans cette entente;

(b) convient de déclarer tout montant dû au gouvernement du Canada en vertu des lois ou d'ententes de financement et qui est devenu en souffrance et arriéré depuis la date de sa demande de financement;

(c) reconnaît que le Canada peut recouvrer tout montant dû au gouvernement du Canada dont il est fait mention à l'alinéa (a) ou (b) en déduisant un tel montant de toute somme due ou payable au bénéficiaire aux termes de cette entente, ou en se compensant à même cette somme; et

(d) déclare utiliser un processus équitable, responsable et transparent lors de l'achat de biens et/ou services dans le cadre du projet.

8.2 Le bénéficiaire déclare que toute personne ayant fait du lobbying pour son compte pour obtenir la subvention qui fait l'objet de cette entente agissait, au moment du lobbying, en conformité avec les dispositions de la *Loi sur le lobbying (L.R.C. (1985), ch. 44 (4e suppl.))*, et ses amendements, et qu'une telle personne à laquelle ladite loi s'applique n'a reçu ni ne recevra du bénéficiaire, directement ou indirectement, aucun paiement conditionnel en tout ou en partie à la conclusion de cette entente.

9.0 DOSSIERS DU PROJET

9.1 Le bénéficiaire doit tenir en bonne et due forme des livres et dossiers documentant la subvention reçue et toute dépense reliée au projet faite à même la subvention.

9.2 Le bénéficiaire doit conserver les livres et dossiers mentionnés à l'article 9.1 pour une période de trois (3) ans suivant la période de réalisation du projet.

9.3 Pendant la période de réalisation du projet ainsi que la période visée à l'article 9.2, le bénéficiaire donnera, sur demande et dans un délai raisonnable, accès aux représentants du Canada à ses fichiers, livres et dossiers relatifs au projet aux fins de vérifier l'utilisation de la subvention et la conformité avec les termes et conditions de cette entente. Le bénéficiaire permettra aux représentants du Canada de prendre des copies et extraits desdits livres et dossiers. Le bénéficiaire fournira aussi au Canada tout renseignement supplémentaire que le Canada pourrait exiger au regard de ces livres et dossiers.

10.0 DEMANDE DU VÉRIFICATEUR GÉNÉRAL DU CANADA

10.1 Si, pendant la période de réalisation du projet ou pendant la période visée à l'article 9.2, le Vérificateur général du Canada, dans le cadre d'une enquête conduite en vertu du paragraphe 7.1(1) de la *Loi sur le vérificateur général (L.R.C. (1985), ch. A-17)*, demande au bénéficiaire de lui fournir quelque dossier, document ou autre renseignement que ce soit relatif à l'utilisation du financement versé dans le cadre de cette entente, celui-ci doit le fournir dans le délai raisonnable pouvant être requis par écrit par le Vérificateur général du Canada.[non applicable à une municipalité ou à un autre Bénéficiaire exclu de son application en vertu de la loi]

11.0 RAPPORTS

11.1 Dans les trente (30) jours suivant la fin de la période de réalisation du projet, le bénéficiaire doit remettre au Canada un rapport final complet et satisfaisant pour le Canada décrivant sommairement les résultats du projet.

12.0 ADMISSIBILITÉ CONTINUE

12.1 Le bénéficiaire doit, pendant la période de réalisation du projet, continuer de répondre aux critères d'admissibilité du programme désigné dans cette entente qui étaient en vigueur au moment de la signature de la présente entente. Ainsi, le bénéficiaire convient d'aviser le Canada immédiatement si un changement à son statut ou un changement touchant les activités du projet fait en sorte qu'il ne répond plus aux critères d'admissibilité du programme en vigueur lors de la signature de la présente entente.

13.0 ÉVALUATION

13.1 Le bénéficiaire reconnaît que le Canada est responsable de l'évaluation du programme nommé dans cette entente. Le bénéficiaire accepte de coopérer avec le Canada en assurant l'accès aux informations nécessaires à cette fin et ce pour tout la durée de la période de réalisation du projet ainsi que pour les trois (3) années subséquentes.

14.0 RÉSILIATION DE L'ENTENTE

Résiliation pour manquement

14.1 (1) Les situations suivantes constituent des cas de manquement :

(a) le bénéficiaire fait faillite, reçoit une ordonnance de séquestre, fait une cession au profit de créanciers, se prévaut d'une loi sur les débiteurs en faillite ou insolvable ou une ordonnance est rendue ou une résolution est adoptée pour la liquidation du bénéficiaire [alinéa 14.1(1)(a) non applicable à une municipalité ou à une commission scolaire];

(b) le bénéficiaire cesse ses opérations [alinéa 14.1(1)(b) non applicable à une municipalité ou à une commission scolaire];

(c) le bénéficiaire manque, ou fait défaut de se conformer, à l'une ou l'autre de ses obligations aux termes de cette entente;

(d) le bénéficiaire, relativement à cette entente, a fait des déclarations ou représentations substantiellement fausses ou trompeuses au Canada ou lui a fourni des renseignements substantiellement faux ou trompeurs; ou

(e) de l'avis du Canada, le risque lié à la capacité du bénéficiaire de mener à bien le projet a changé de façon substantielle et défavorable.

(2) Si :

(a) un cas de défaut décrit aux alinéas (1)(a) ou (b) se produit [alinéa 14.1(1)(b) non applicable à une municipalité ou à une commission scolaire]; ou

(b) un cas de défaut décrit aux alinéas (1)(c), (d) ou (e) se produit, que le Canada donne au bénéficiaire un avis écrit l'informant qu'il doit dans un délai d'au moins trente (30) jours remédier au défaut ou mettre en place un plan de redressement satisfaisant pour le Canada, et qu'au terme de ce délai le bénéficiaire n'a pas rempli cette exigence.

le Canada peut résilier immédiatement l'entente par avis écrit. À compter de cette date, le Canada n'a plus d'obligation de verser quelque partie non encore versée de la subvention prévue à l'entente.

(3) Durant le délais prévu à l'alinéa 14.1(2)(b) le Canada peut suspendre tout versement prévu dans le cadre de cette entente.

(4) Le fait que le Canada s'abstienne de recourir à une mesure prévue à cette entente ne doit pas être considéré comme une renonciation à ce droit et, de plus, l'exercice intégral, partiel ou limité d'un droit qui lui est conféré n'empêchera en aucun cas le Canada d'exercer simultanément ou ultérieurement tout autre droit ou d'appliquer toute autre mesure prévue à l'entente ou de toute loi applicable.

14.2 L'une ou l'autre des parties peut aussi résilier cette entente en tout temps sans motif sur préavis écrit d'au moins quatre-vingt-dix (90) jours de l'intention de résiliation.

15.0 EXIGENCES EN MATIÈRE DE REMBOURSEMENT

15.1 (1) Lorsqu'un avis écrit est fourni par l'une ou l'autre des parties en application de l'article 7 ou 14 :

(a) le bénéficiaire ne doit plus prendre de nouvel engagement relié au projet pouvant générer des dépenses admissibles et doit annuler tout engagement en cours pouvant en générer ou, à défaut, réduire dans la mesure du possible le montant de telles dépenses pouvant découler dudit engagement, et

(b) toutes les dépenses admissibles engagées par le bénéficiaire jusqu'à la date de la résiliation seront payées par le Canada, y compris les coûts, directs et accessoires, de l'annulation d'obligations du bénéficiaire nécessité par la résiliation de l'entente; un paiement ou un remboursement sera effectué en vertu de cet alinéa uniquement s'il a été démontré, à la satisfaction du Canada, que le bénéficiaire a réellement engagé ces dépenses et qu'elles sont raisonnables et attribuables à la résiliation de l'entente.

(2) Si cette entente est résiliée par le bénéficiaire conformément à l'article 14.2, ce dernier devra rembourser au Canada les fonds de subvention non utilisés en sa possession ou sous son contrôle dans un délai de trente (30) jours.

15.2 Nonobstant l'article 15.1, si cette entente est résiliée par le Canada conformément à l'article 14.1 parce que le bénéficiaire a utilisé la subvention à une fin ou pour effectuer des dépenses non conformes à cette entente, le Canada peut, en plus d'exercer tout droit qui lui est conféré par cette entente ou dont il dispose en droit ou équité, exiger du bénéficiaire le remboursement des fonds de subvention utilisés par le bénéficiaire à des fins autres que de réaliser le projet ou affectées à des coûts autres que des dépenses admissibles.

15.3 Si le Canada exige le remboursement de tout ou une partie de la subvention conformément à l'article 15.1 ou l'article 15.2, le montant exigé est réputé une créance exigible par le Canada et le bénéficiaire doit payer le montant au Canada immédiatement à moins que le Canada n'indique autrement.

15.4 Des intérêts seront payables sur les remboursements dus dans le cadre de cette entente et en souffrance, conformément au *Règlement sur les intérêts et les frais administratifs (DORS /96-188)*, (le « règlement ») établi conformément à la *Loi sur la gestion des finances publiques (L.R.C. (1985), ch. F-11)*. Les intérêts sont composés et calculés mensuellement au « taux d'escompte moyen », au sens du règlement, majoré de trois pour cent (3%), à compter de la date d'échéance indiquée dans l'avis de remboursement et jusqu'à la journée qui précède la date de réception du paiement par le Canada.

16.0 INDEMNISATION

16.1 Le bénéficiaire doit, à la fois pendant et après la période de réalisation du projet, tenir le Canada indemne et à couvert des réclamations, pertes, dommages, coûts, dépenses et autres mesures prises, soutenues, en instance ou menacées d'être présentés en justice, de quelque façon que ce soit, et qui sont attribuable à une blessure ou au décès d'une personne, ou à une perte ou un dommage à la propriété causé ou présumé causé par un geste délibéré ou négligent, une omission ou un délai de la part du bénéficiaire ou de ses employés ou agents relativement à quoi que ce soit qui doit être fourni ou réalisé par le bénéficiaire dans le cadre de cette entente, présumément ou obligatoirement, ou qui doit être autrement fait dans le cadre de la réalisation du projet. Il est entendu que le Canada ne saurait réclamer une indemnité en vertu du présent article en cas d'accident, pertes ou dommages causés par lui ou ses employés.

17.0 RELATIONS ENTRE LES PARTIES ET NON-RESPONSABILITÉ DU CANADA

17.1 La gestion et la supervision du projet sont l'unique et entière responsabilité du bénéficiaire. Le bénéficiaire n'est d'aucune façon autorisé à faire une promesse ou conclure une entente ou un contrat au nom du Canada. Cette entente ne vise que le financement, et ne constitue pas un contrat aux fins d'obtention de services ou un contrat de service ou d'emploi. Les responsabilités du Canada se limitent à fournir au bénéficiaire une aide financière pour soutenir le projet. Les parties aux présentes déclarent que rien dans cette entente ne vise à établir un partenariat, une relation employeur-employé ou une relation de mandataire entre elles. Le bénéficiaire ne doit pas se présenter comme un agent, employé ou partenaire du Canada.

17.2 Rien dans cette entente ne crée un engagement ou une obligation de la part du Canada à l'égard d'un financement supplémentaire ou futur du projet au-delà de la période de réalisation du projet, ou qui dépasse le montant du financement du Canada prévu à la l'entente. Le Canada ne sera responsable d'aucun emprunt, contrat de location-acquisition, ou autre obligation à long terme que le bénéficiaire peut encourir dans l'exercice de ses responsabilités dans le cadre de cette entente, ni d'aucune obligation encourue par le bénéficiaire envers une autre partie relativement au projet.

18.0 CONFLIT D'INTÉRÊTS

18.1 Aucun titulaire de charge publique ou fonctionnaire, ancien ou actuel, visé par la *Loi sur les conflits d'intérêts (L.C. 2006, ch. 9, art. 2)*, la *Politique sur les conflits d'intérêts et l'après-mandat* ou le *Code de valeurs et d'éthique du secteur public* ne peut bénéficier d'un avantage direct découlant de l'entente, à moins que la fourniture ou la réception d'un tel avantage se fasse en conformité avec cette loi et ces codes.

18.2 Aucun membre du Sénat ou de la Chambre des communes ne peut être partie à cette entente, en tout ou en partie, ni en tirer quelque avantage qui en découle d'une façon qui diffère de ce à quoi le grand public a accès.

19.0 ANNONCES ET RECONNAISSANCE DU FINANCEMENT FÉDÉRAL

19.1 Le bénéficiaire accorde au Canada soixante (60) jours à compter de la date de la signature de l'entente pour faire l'annonce du projet. Les parties collaboreront pour la première annonce concernant le financement du projet, y compris toutes activités de communication, événement ou cérémonie officielle devant servir à la promotion du projet. Le moment, le lieu et l'ordre du jour de telles activités doivent convenir au Canada.

19.2 Afin de permettre une participation du Canada lors d'activité de communications subséquentes concernant le projet; le bénéficiaire informera le Canada au plus tard vingt (20) jours de calendrier précédant une telle activité de communications.

19.3 Le bénéficiaire veillera à ce que toute publication, annonce publicitaire et communication (incluant sur les médias sociaux ou sur les sites Web) concernant le projet, comporte une reconnaissance de la contribution du Canada, et ce, à la satisfaction du Canada.

20.0 ACCÈS À L'INFORMATION

20.1 Le bénéficiaire reconnaît que le Canada est soumis à la *Loi sur l'accès à l'information (L.R.C. (1985), ch. A-1)*, et que les renseignements obtenus par le Canada relatif à cette entente peuvent être divulgués au public sur demande en vertu de ladite loi.

21.0 DIVULGATION PROACTIVE

21.1 Le bénéficiaire reconnaît que son nom, le montant du financement du Canada et la nature générale du projet peuvent être rendus publics par le Canada conformément à l'engagement du gouvernement du Canada à divulguer de manière proactive, l'octroi de subventions et de contributions.

22.0 AVIS

22.1 Tout avis à transmettre et tout rapport, renseignement, correspondance et autre document à fournir par l'une ou l'autre des parties dans le cadre de cette entente le seront par livraison personnelle, courrier, service de messagerie, télécopie ou courriel, à l'adresse postale, au numéro de télécopieur ou à l'adresse courriel, selon le cas, de la partie destinataire. En cas de changement d'adresse postale, de numéro de télécopieur, d'adresse courriel ou de contact, la partie concernée doit en aviser l'autre partie par écrit aussitôt que possible.

22.2 Les avis, rapports, renseignements, correspondances et autres documents livrés en personne ou par messagerie sont réputés reçus sur livraison ou, s'ils sont envoyés par courrier, cinq (5) jours ouvrables après la date d'envoi ou, dans le cas d'avis et de documents envoyés par télécopie ou courriel, un (1) jour ouvrable après l'envoi.

23.0 CESSION DE L'ENTENTE

23.1 Le bénéficiaire ne peut céder cette entente, en tout ou en partie, sans le consentement écrit préalable du Canada.

24.0 SUCCESSEURS ET CESSIONNAIRES

24.1 Cette entente lie les parties, leurs successeurs et cessionnaires respectifs.

25.0 CONFORMITÉ AVEC LES LOIS

25.1 Cette entente sera gouvernée et interprétée conformément aux lois applicables dans la province ou le territoire où le projet sera exécuté. Les parties conviennent que les tribunaux de la province ou du territoire où le projet sera exécuté sont compétents pour entendre tout litige découlant de la présente entente.

25.2 Le bénéficiaire doit réaliser le projet en conformité avec l'ensemble des lois et règlements applicables, notamment en matière environnementale, en matière de confidentialité et en matière de protection des renseignements personnels. Le bénéficiaire doit obtenir, avant le début du projet, tous les permis, licences, consentements et autres autorisations nécessaires à sa réalisation.

26.0 MODIFICATION

26.1 Cette entente peut être modifiée, en tout respect des lois applicables, par consentement mutuel des parties. Toute modification à cette entente n'est valide que si elle est écrite et qu'elle est signée par les parties.

27.0 ASSOCIATION NON CONSTITUEE EN PERSONNE MORALE

27.1 Si le bénéficiaire est une association non constituée en personne morale, les personnes qui signent cette entente au nom du bénéficiaire comprennent et conviennent que, en plus de signer cette entente en leur capacité de représentant pour le compte du bénéficiaire, elles sont personnellement, conjointement et solidairement responsables des obligations du bénéficiaire dans le cadre de cette entente, y compris du paiement de toute dette susceptible d'être due au Canada dans le cadre de cette entente.

28.0 COMMUNICATION AVEC LE PUBLIC

28.1 Le bénéficiaire sera tenu de définir clairement la clientèle du projet et de prendre les mesures appropriées pour communiquer avec le public visé.

29.0 ACCORD SANS PRÉJUDICE [clause applicable au Québec seulement]

29.1 Cette entente est sans préjudice des discussions entre le gouvernement du Québec et le Canada en vue de nouvelles ententes-types pour l'application de la Loi sur le ministère du Conseil exécutif (RLRQ, chapitre M-30) aux accords de financement liés aux programmes du ministère de l'Emploi et du Développement social.

Annexe A - Description du projet et signatures. (à être complété par EDSC)

Numéro de dossier du Système commun pour les subventions et contributions (SCSC) : 1591297

Titre du projet : Aire de jeu accessible au pare Alphonse Carrière

Nom du programme : Fonds pour l'accessibilité - Subventions

Cette demande est : ☑ Approuvée ☐ Rejetée

Montant de subvention :

Emploi et Développement social Canada

Employment and Social Development Canada

Numéro du Projet: 1591297

Montant demandé : 85817 $ Montant approuvé : 85817 $

Description du projet et ajustements au budget :

Activité :
Le projet proposé consiste à ajouter des composantes à la structure de jeux déjà existante pour la rendre accessible.

.paver le sentier accessible de 32 metres
. excavation de l'aire où les structures de jeu accessibles seront installées;
. installation des structures;
. Soudage des lisses en acier;
. poser les poutres de retention du paillis.

Budget :
N/A

Autres conditions :
Condition relative à la Loi sur les Langues officielles :
Le bénéficiaire reconnait que le Canada est assujetti à l'application de la Loi sur les Langues officielles de sorte qu'il pourrait devoir offrir activement les services liés au projet, faire la documentation et les annonces liées au projet dans les deux langues officielles.

Obligations liées spécifiquement au projet:
Ex. : publications, recherches, ou tout autre outil imprimés ou publiés dans les deux langues.

Période de réalisation du projet :

De : 2019/02/01 À : 2020/01/31

Mode de paiement :

Nombre de versements : 1 1er Montant du (des) versement(s) : 85817 $

1ère Date des versement(s) : 2019/02/01

Date d'approbation : 2018/12/19

Signature du Délégué d'autorité du Canada au nom du ministre de l'Emploi et du Développement social

2019-01-19.

CANADA

Emploi et Développement social Canada
Employment and Social Development Canada

Numéro du Projet: 1591297

POUR LE BÉNÉFICIAIRE : (à être complété par le bénéficiaire)

a) J'atteste avoir la capacité et être autorisé à signer les Modalités de l'entente de subvention au nom de l'organisme « bénéficiaire »; et

b) J'ai lu, je comprends et je suis en accord avec les Modalités de l'entente de subvention et je suis d'accord qu'une fois approuvées et signées par les parties, les présentes modalités entreront immédiatement en vigueur et constitueront une entente de subvention ayant force de loi.

Nom du signataire (en caractères d'imprimerie) | Titre (en caractères d'imprimerie)

Signature | Date (aaaa-mm-jj)

Nom du signataire (en caractères d'imprimerie) | Titre (en caractères d'imprimerie)

Signature | Date (aaaa-mm-jj)

Nom du signataire (en caractères d'imprimerie) | Titre (en caractères d'imprimerie)

Signature | Date (aaaa-mm-jj)

PROTÉGÉ UNE FOIS REMPLI - B
Réservé à l'administration
Numéro de dossier et organisation

FORMULAIRE DES SIGNATAIRES AUTORISÉS
ENTENTE DE SUBVENTION

Nom de l'organisme : Cité de Clarence-Rockland **Date en vigueur :** 2019-01-22

AVIS AUX SIGNATAIRES

Les renseignements fournis sont recueillis en vertu de la *Loi sur le ministère de l'Emploi et du Développement social*. Les renseignements figurant dans le présent formulaire des signataires autorisés seront utilisés et pourraient être divulgués à des fins de la validation de l'identité des personnes au sein de l'organisme demandeur autorisées à signer des ententes, des chèques et des rapports. Les signataires du présent formulaire pourraient devoir fournir des renseignements supplémentaires et/ou des documents qui confirment leur identité et leur rôle au sein de l'organisme bénéficiaire.

Il n'est pas obligatoire de remplir le présent formulaire. Cependant, le demandeur ne pourra être considéré pour du financement s'il ne fournit pas ces renseignements.

Les renseignements fournis peuvent être communiqués à des consultants externes, à des membres de comités d'examen, à des représentants d'autres ministères, aux gouvernements fédéral, provinciaux ou territoriaux, ou à des membres de Parlement aux fins d'examen et de vérification.

Les renseignements fournis pourraient être utilisés ou communiqués à des fins d'analyse politique, de recherche ou d'évaluation. Afin de mener ces activités pour ce faire, diverses sources d'information sous la garde et le contrôle de l'Emploi et Développement social Canada (EDSC) pourraient être liées. Cependant, ces utilisations supplémentaires et/ou la divulgation des renseignements personnels ne seront jamais à l'origine d'une décision administrative concernant une personne.

Les renseignements personnels recueillis au moyen du présent formulaire ou mis à la disposition de EDSC aux fins d'identification seront administrés conformément à la *Loi sur la protection des renseignements personnels* et aux dispositions régissant la protection des renseignements personnels énoncées dans la *Loi sur le ministère de l'Emploi et du Développement social*, selon le cas. La *Loi sur la protection des renseignements personnels* offre à tous le droit d'accès à leurs renseignements personnels et de protection de ceux-ci, ce qui est décrit dans le fichier de renseignements personnels EDSC UPP 298. Pour connaître la marche à suivre pour obtenir ces renseignements, consultez la publication du gouvernement intitulée Info Source, qui se trouve en ligne à l'adresse http://www.infosource.gc.ca. Info Source peut également être consultée en ligne dans tous les Centres Service Canada.

ATTESTATION

Lorsqu'une personne fournit un spécimen de signature dans le présent formulaire, elle atteste :

a) qu'elle est la personne dont le nom figure à côté du spécimen de signature;
b) qu'elle fournira à EDSC, sur demande, les documents nécessaires aux fins d'identification;

c) qu'elle détient le titre énoncé ci-dessous et qu'en cette qualité, elle est autorisée à apposer sa signature au nom de l'organisme demandeur conformément aux actes constitutifs, aux règlements et à d'autres documents pertinents.

Section 1 : Signataires autorisés aux fins de conclusion d'ententes
(Selon les lettres patentes ou d'autres actes constitutifs)

Veuillez fournir le nom et le titre des signataires autorisés, de même qu'un spécimen de signature.

Titre	Nom	Spécimen de signature
Maire	Guy Desjardins	
Directeur des finances et DG par interim	Rob Kehoe	
Greffière	Monique Ouellet	
Directeur des Services communautaires	Pierre Boucher	

Combien de ces signatures sont requises pour lier votre organisme à un accord juridique? 2

Section 2 : Signataires autorisés aux fins de signature de chèques au nom de votre organisme

Veuillez fournir le nom et le titre des signataires autorisés, de même qu'un spécimen de signature.

Titre	Nom	Spécimen de signature
Maire	Guy Desjardins	
Conceiller municipal	Michel Levert	
Conceiller municipal	Mario Zanth	
Directeur des finances et DG par interim	Rob Kehoe	
Trésorier	Frédéric Desnoyers	

Combien de signatures sont requises pour signer des chèques au nom de votre organisme? 2

Section 3 : Signataires autorisés pour les rapports présentés à EDSC

Veuillez fournir le nom et le titre des signataires autorisés, de même qu'un spécimen de signature.

Titre	Nom	Spécimen de signature
Trésorier	Frédéric Desnoyers	
Directeur des Services communautaires	Pierre Boucher	
Gestionnaire des Relations communautaires	Martin Irwin	

Combien de signatures sont requises pour un signer un rapport présenté à EDSC? 2

- Veuillez noter que c'est la responsabilité de l'organisme de fournir au Ministère une copie à jour du formulaire des signataires autorisés si des changements sont nécessaires.

CORPORATION OF THE CITY OF CLARENCE-ROCKLAND
BY-LAW 2019-15

BEING A BY-LAW OF THE CITY OF CLARENCE-ROCKLAND TO CONFIRM PROCEEDINGS OF THE COUNCIL OF THE CITY OF CLARENCE-ROCKLAND AT ITS REGULAR MEETING HELD ON FEBRUARY 4, 2019.

WHEREAS Sub-section 5(1) of the Municipal Act, 2001, as amended, provides that the powers of a municipal corporation are to be exercised by its Council;

AND WHEREAS Sub-section 5(3) of the said Municipal Act provides that the powers of every council are to be exercised by By-law;

AND WHEREAS it is deemed expedient that the proceedings of the Council of the City of Clarence-Rockland at this meeting be confirmed and adopted by By-law;

THEREFORE the Council of the City of Clarence-Rockland enacts as follows:

1. **THE** action of the Council of the City of Clarence-Rockland in respect of each recommendation contained in any reports of committees and of local boards and commissions and each motion and resolution passed and other action taken by the Council of the City of Clarence-Rockland at this meeting is hereby adopted and confirmed as if all such proceedings were expressly embodied in this by-law.

2. **THE** Mayor and the appropriate officials of the City of Clarence-Rockland are hereby authorized and directed to do all things necessary to give effect to the action of the Council of the City of Clarence-Rockland referred to in the proceeding section.

3. **THE** Mayor and the Clerk, are authorized and directed to execute all documents necessary in that behalf and to affix thereto the corporate seal of the City of Clarence-Rockland.

READ, PASSED AND ADOPTED IN OPEN COUNCIL THIS 4TH DAY OF FEBRUARY, 2019.

Guy Desjardins, Mayor

Monique Ouellet, Clerk